Quality Changes the World

SANY

All Terrain Crane

SAC600E

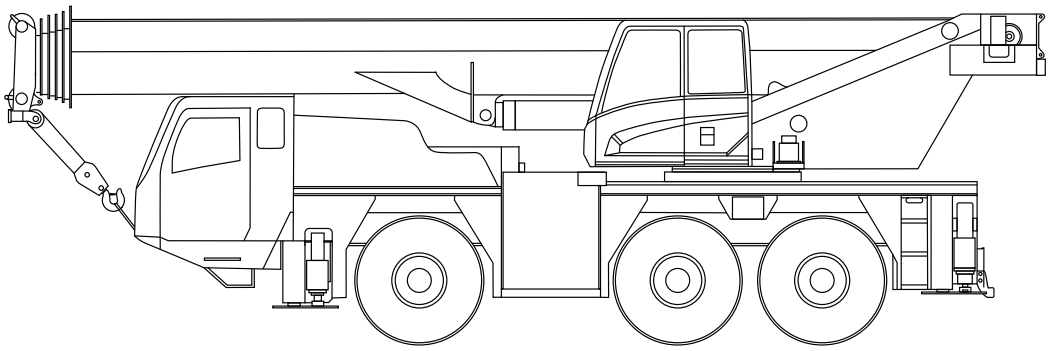

Load Charts Manual

SAC600E All Terrain Crane

Load Charts Manual

⚠ WARNING

Read and follow the safety precautions and instructions in this manual and on the machine decals.Failure to do can cause serious injury, death or property damage. Keep this manual with the machine for reading and future reference.

Sany Group

Sany Automobile Hoisting Machinery Co., Ltd.

No.168, Jinzhou Avenue, Jinzhou Development Zone, Changsha, Hunan, China

Tel: 0086-4006098318

E-mail:crd@sany.com.cn

Website: www.sanyglobal.com

Scan here to download the SANY Global Customer Portal APP

© 2023 by Sany Group. All rights reserved. No part of this publication may be reproduced, used, distributed or disclosed except during normal operation of the machine as described herein. All information included within this publication was accurate at the time of publication. Product improvements, revisions, etc., may result in differences between your machine and what is presented here. Sany Group assumes no liability. For more information, contact Sany Group.

Exemption Clauses

Truck crane, all terrain crane and rough terrain crane are designed and manufactured according to existing technology and recognized technical safety regulations. The crane may only be used in flawless technical condition according to its task, as well as with constant awareness of safety and dangers. Any issues that could affect safety must be fixed immediately.

The crane documentation has been translated to the best of one’s knowledge. Sany assumes no liability for translation errors. The Chinese version is solely applicable for factual accuracy. If you find any errors or any misunderstandings when reading the crane documentation, contact Sany immediately.

The destined use of the crane consists solely in vertical lifting and lowering of free and non-adhered loads, whose weight and center of gravity are known. Destined use also includes the adherence of required safety guidelines, conditions, prerequisites, set up conditions and working steps in crane documentation (for example: SOM, Load Charts Manual and so on). Sany assumes no liability for any accident, damage or injury due to no-destined use or improper use of the crane.

Modifications to the crane may only be made with the prior written approval of Sany. Do not weld any crack without permission from Sany. Sany assumes no liability for any accident, damage or injury due to the modifications and welding without authorization.

Only use original spare parts and tools from Sany or approved by Sany or provided by component manufacturer (such as engine, etc.), to maintain or repair the crane. Sany assumes no liability for any accident, damage or injury due to the use of unauthorized spare parts or tools.

Sany assumes no liability for any accident, damage or injury due to force majeure like natural or geologic disasters (such as earthquake, tsunami, tornado, typhoon, hurricane, etc.), and social events(such as war, strike, turmoil, etc.).

The crane documentation provides basic guidelines on safe operations for all authorized personnel. Sany is unable to foresee all risks at the work sites, so workers, operators and owners must confirm if there are other safety concerns that must be addressed in specific job situations.

This machine complies with all applicable regulations and standards of the country to which the machine is shipped.

If this machine was purchased in another country or from someone in another country, it may lack certain safety features and specifications that are necessary for use in your country. Follow and observe superior safety standards between local regulations and this manual.

If you find any questions or any misunderstandings, contact Sany immediately.

Table of Contents

1 Basic information 1-3
1.1 General 1-3
1.2 Certifications of the Crane 1-3
1.3 Terms and Definitions of the Crane 1-5
1.4 Safety information 1-8
1.4.1 General 1-8
1.4.2 Safety and Warning Symbols 1-8
1.4.3 Setup 1-9
1.4.4 General Notes and Warning 1-9
1.4.5 Danger of Tipping or Risk of Overloading Situations 1-11
1.4.6 LMI Overload Protection 1-11
1.4.7 Safety Devices 1-12
1.5 Influence Factors for Crane Capacity 1-13
1.5.1 Influence of Wind Speed 1-13
1.5.2 Permissible Ground Pressure 1-15
1.6 Symbols and codes 1-16
1.6.1 Symbols and Codes above Load Chart 1-16
1.6.2 Symbols and Codes in Load Chart 1-18
1.7 Configuration 1-20
1.7.1 Operating modes 1-20
1.7.2 Telescopic Boom 1-20
1.7.3 Variations of Fixed Lattice Jib 1-21
1.7.4 Counterweight 1-22
1.7.5 Wire Rope 1-25
1.7.6 Hook Block 1-25

2 Working Range Diagram 2-3
2.1 T/P 2-3
2.2 TJ (9.2m) 2-4
2.3 TJ (16m) 2-5
2.4 TA 2-6

3 Power telescopic boom(P) 3-3

3.1 Outrigger 100% extended 3-3
3.1.1 Counterweight 13 t 3-3

4 Telescopic boom(T) 4-3
4.1 Outrigger 100% extended 4-3
4.1.1 Counterweight 13 t 4-3
4.1.2 Counterweight 10 t 4-6
4.1.3 Counterweight 6.5 t 4-9
4.1.4 Counterweight 4.2 t 4-12
4.1.5 Counterweight 3.9 t 4-15
4.2 Outrigger 50% extended 4-18
4.2.1 Counterweight 13 t 4-18
4.2.2 Counterweight 10 t 4-21
4.2.3 Counterweight 6.5 t 4-24
4.2.4 Counterweight 4.2 t 4-27
4.2.5 Counterweight 3.9 t 4-30

5 Telescopic boom+Jib(TJ) 5-3
5.1 Jib16 m, Outrigger 100% extended 5-3
5.1.1 Counterweight 13 t 5-3
5.1.2 Counterweight 10 t 5-5
5.1.3 Counterweight 6.5 t 5-7
5.1.4 Counterweight 4.2 t 5-9
5.1.5 Counterweight 3.9 t 5-11
5.2 Jib9.2 m, Outrigger 100% extended 5-13
5.2.1 Counterweight 13 t 5-13
5.2.2 Counterweight 10 t 5-15
5.2.3 Counterweight 6.5 t 5-17
5.2.4 Counterweight 4.2 t 5-19
5.2.5 Counterweight 3.9 t 5-21

6 Telescopic boom+Auxiliary jib(TA) 6-3
6.1 Jib3 m, Outrigger 100% extended 6-3
6.1.1 Counterweight 13 t 6-3
6.1.2 Counterweight 10 t 6-4
6.1.3 Counterweight 6.5 t 6-5

6.1.4 Counterweight 4.2 t 6-6
6.1.5 Counterweight 3.9 t 6-7

7 Telescopic boom+Auxiliary boom nose(TN) 7-3

7.1 Outrigger 100% extended 7-3
7.1.1 Counterweight 13 t 7-3
7.1.2 Counterweight 10 t 7-6
7.1.3 Counterweight 6.5 t 7-9
7.1.4 Counterweight 4.2 t 7-12
7.1.5 Counterweight 3.9 t 7-15
7.2 Outrigger 50% extended 7-18
7.2.1 Counterweight 13 t 7-18
7.2.2 Counterweight 10 t 7-21
7.2.3 Counterweight 6.5 t 7-24
7.2.4 Counterweight 4.2 t 7-27
7.2.5 Counterweight 3.9 t 7-30

BLANK PAGE

Basic information

1 Basic information 1-3
1.1 General 1-3
1.2 Certifications of the Crane 1-3
1.3 Terms and Definitions of the Crane 1-5
1.4 Safety information 1-8
1.4.1 General 1-8
1.4.2 Safety and Warning Symbols 1-8
1.4.3 Setup 1-9
1.4.4 General Notes and Warning 1-9
1.4.5 Danger of Tipping or Risk of Overloading Situations 1-11
1.4.6 LMI Overload Protection 1-11
1.4.7 Safety Devices 1-12
1.5 Influence Factors for Crane Capacity 1-13
1.5.1 Influence of Wind Speed 1-13
1.5.2 Permissible Ground Pressure 1-15
1.6 Symbols and codes 1-16
1.6.1 Symbols and Codes above Load Chart 1-16
1.6.2 Symbols and Codes in Load Chart 1-18
1.7 Configuration 1-20
1.7.1 Operating modes 1-20
1.7.2 Telescopic Boom 1-20
1.7.3 Variations of Fixed Lattice Jib 1-21
1.7.4 Counterweight 1-22
1.7.5 Wire Rope 1-25
1.7.6 Hook Block 1-25

BLANK PAGE

1. Basic information

1.1 General

Rated loads as shown on load charts pertain to this machine as originally manufactured and equipped. Modifications to the machine or use of optional equipment other than that specified can result in a reduction of capacity.

Construction equipment can be hazardous if improperly operated or maintained. Operation and maintenance of this machine shall be in compliance with the information in the Safety, Operation amp; Maintenance Manual supplied with this machine. If the manual is missing, order replacements from the manufacturer through the distributor.

The operator and other personnel associated with the machine shall fully acquaint themselves with the latest standards for cranes.

1.2 Certifications of the Crane

3C Certification

The full name of ”3C” certification is ”China Compulsory Product Certification”. It is a product conformity assessment system implemented by the Chinese government in accordance with laws and regulations in order to protect consumers’ personal safety and national security, strengthen product quality management.

The crane has passed the ”3C” certification.

CE Certification

CE certification is a European safety certification mark according to EU laws, also known as CE mark. It is a compulsory certification mark in Europe, and regarded as a passport for manufacturers to enter the European market. CE stands for regulatory compliance in Europe.

This crane has passed the CE certification.

ZERTIFIKAT ◆ CERTIFICATE ◆ 認證證書 ◆ СЕРТИФИКАТ ◆ CERTIFICADO ◆ CERTIFICAT

CE

TÜV SÜD Product Service

Attestation of Conformity

No. M8A 091538 0041 Rev. 00

Holder of Certificate: **Sany Automobile Manufacturing Co.,LTD**
No.168, West Jinzhou Avenue
410600 Changsha City, Hunan Province
PEOPLE'S REPUBLIC OF CHINA

Product: **Vehicle crane (All Terrain Crane)**

Model(s): **SAC600E**

Parameters:
Rated Voltage: DC24V (Battery Powered)
Rated Capacity: 60t at 3.0m
Rated Input Power: 280kW (of engine)
Engine Type: OM470LA.E3A-3

Tested according to: EN 13000:2010/A1:2014

This Attestation of Conformity is issued on a voluntary basis according to Council Directive 2006/42/EC relating to machinery. It confirms that the listed equipment (not Annex IV equipment) complies with the principal protection requirements of the directive. It refers only to the sample submitted to TÜV SÜD Product Service GmbH for testing and certification. For details see: www.tuvsud.com/ps-cert

Test report no.: 646602019901

Date, 2021-06-25

(Nevill Lv)

Page 1 of 1

After preparation of the necessary technical documentation as well as the EC declaration of conformity the required CE marking can be affixed on the product. Other relevant directives have to be observed.

TÜV

TÜV SÜD Product Service GmbH • Certification Body • Ridlerstraße 65 • 80339 Munich • Germany

1.3 Terms and Definitions of the Crane

Directional terms

Directional name	Definition
Travel forward	Go with the driver’ s cab on the front.
Travel rearward	Go with the taillights of the chassis on the front.
The front, rear, right, left of the driver’ s cab	Refer to the crane chassis. The driver’ s cab is always on the front. The direction definition remains the same regardless of slewing of superstructure.

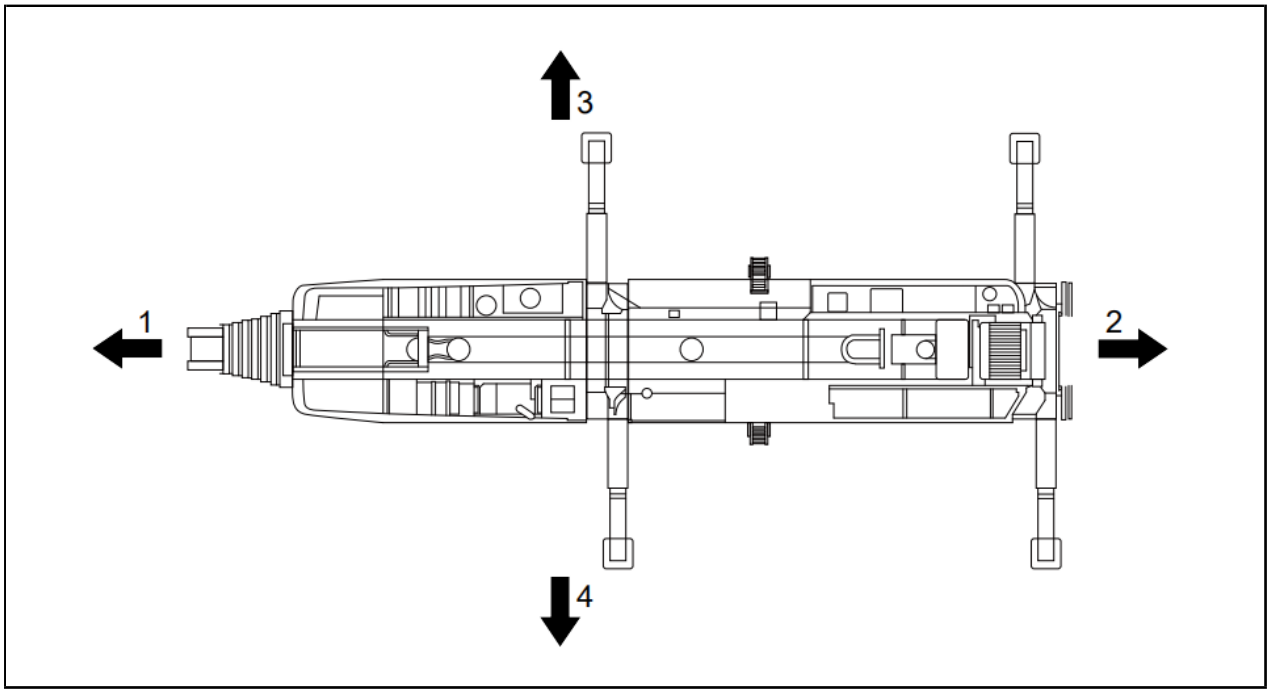

1. Front
2. Rear
3. Right
4. Left

Lifting terms

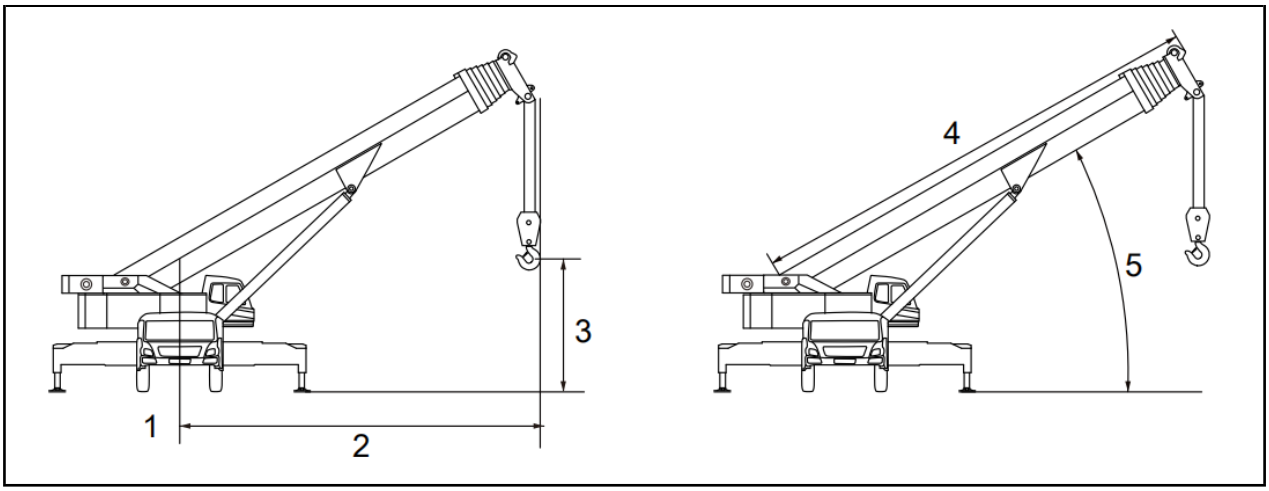

	Name	Description
1	Center line of rotation	
2	Working radius	The radius refers to the horizontal distance between the center line of rotation and the center of the vertical hoist line or tackle with load applied.
3	Lifting height	The lifting height depends on each radius, which refers to the vertical distance between hook bottom and the ground when the hook is raised to its highest position.
	Maximum lifting height	The maximum lifting height refers to the maximum height that can be reached.
4	Telescopic boom length	The telescopic boom length refers to the distance along a straight line through the center line of the telescopic boom foot pin to the center line of telescopic boom head sheave shaft, measured along the longitudinal axis of the telescopic boom.
5	Telescopic boom angle	The telescopic boom angle refers to angle between center line of telescopic boom and surface.

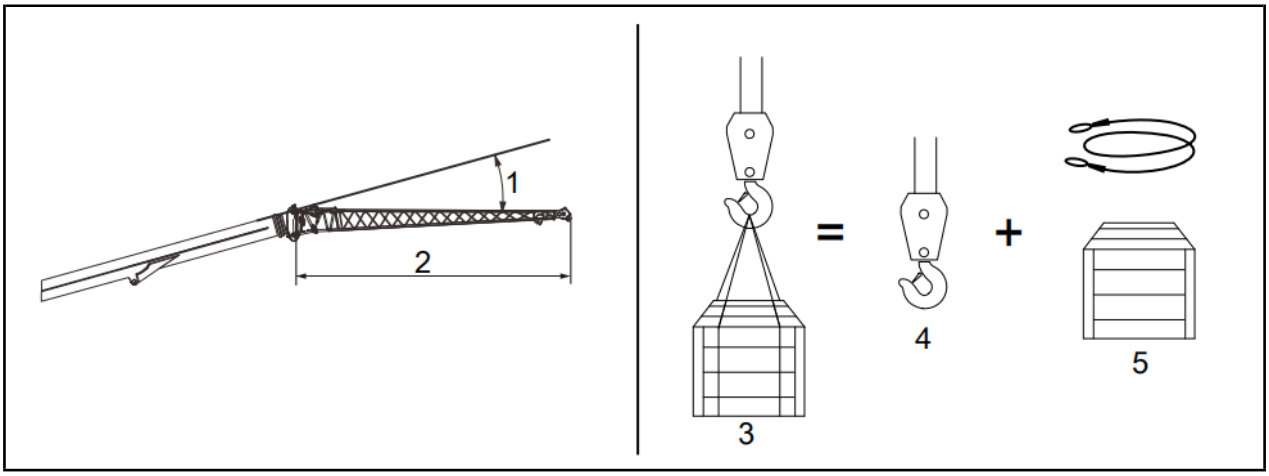

	Name	Description
1	Jib offset angle	Jib offset angle refers to the angle between the extended jib center line and the telescopic boom center line.
2	Jib length	Jib length refers to the distance between the pivot point pin at jib-butt and the axis line of the pulley at the head of jib.
3	Rated lifting capacity	Rated lifting capacity refers to the rated load for any given load radius and telescopic boom angle under specified operating conditions and machine configurations.The rated lifting capacity (3) includes the mass of hook (4), load and lifting accessories (5).
	Freely Suspended Load	Load hanging free with no direct external force applied except by the hoist cable.

Working area terms

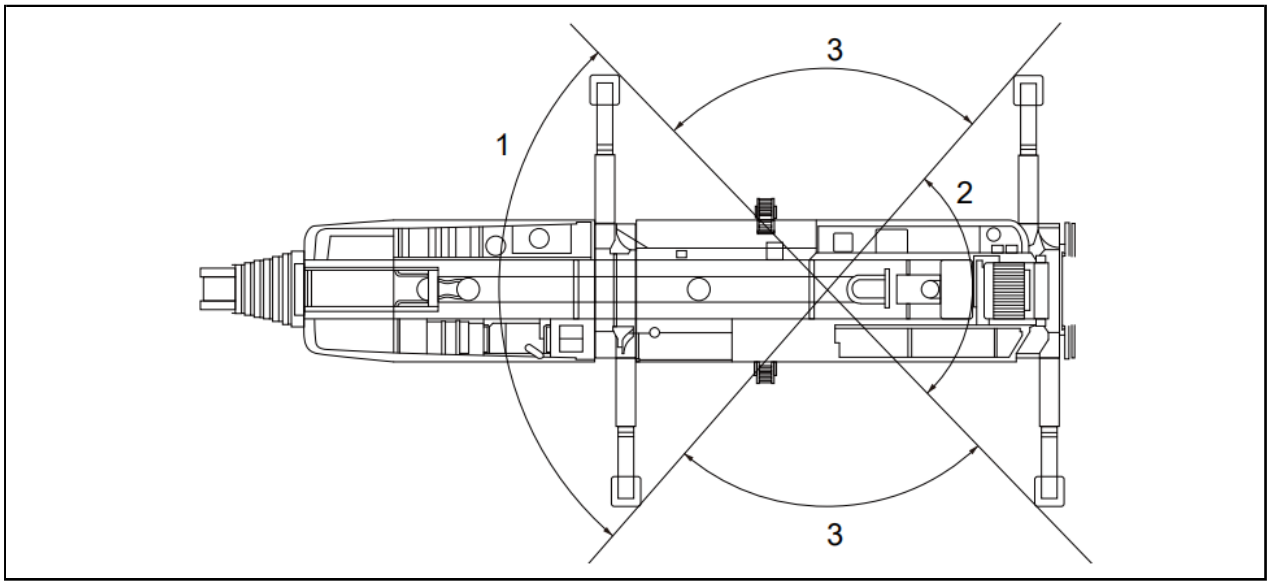

	Name	Description
1	Over-front area	The forward working area of the crane for which lifting capacities have been listed in the load charts. In case of a heavy load, it is advised not to hoist the load in the front area to ensure high stability of the whole crane.
	Over-front capacity	Rated lifting capacity that can be lifting in the over-front area.

	Name	Description
2	Over-rear area	The rear working area of the crane for which lifting capacities have been listed in the load charts.
	Over-rear capacity	Rated lifting capacity that can be lifting in the over-rear area.
3	Over-side area	The working area not included in over-front and over-rear.
	Over-side capacity	Rated lifting capacity that can be lifting in the over-side area.

Stable section：The section of the load charts table in which the major factor for determining lifting capacity is the stability of the crane. The capacities given below the bold line are determined based on stability.

Strength section：The section of the load charts table in which the major factor for determining lifting capacity is the structural strength of the crane. The capacities given above the bold line are those determined based on structural strength.

All-area applicable hoisting capacity：The rated lifting capacity that is applicable to all working areas including the over-front, over-rear, and over-side area.

1.4 Safety information

1.4.1 General

⚠ WARNING

Risk of property damage and personal injuries/death!
Ignore or failure to obey the safety rules can cause serious injuries or death.
• Make sure the precautions described are fully understood before operating this machine.
• Refer to Safety, Operation
amp; Maintenance manual for detailed safety information.

The safety information in this Load Charts Manual only provides a basic guide line for safe operation for all authorized personnel. Refer to Safety, Operation amp; Maintenance manual for detailed safety information. Sany is unable to forecast all risks on work sites, so workers, operators and owners must consider if there are other safety concerns that must be addressed for specific job situation.

Local governments or authorities may have more strict standards. If some stipulations in this manual disagree with the local laws or regulations, the stricter prevails.

1.4.2 Safety and Warning Symbols

The safety information in this manual follows the standard of ANSI Z535.6-2011 and ISO 13200-1995. Each hazard alert includes type of hazard, consequence and how to avoid the hazard.

Read through the manual and observe the instructions in the hazard alerts to make sure the safe use of the crane.

Alert symbols

DANGER	**DANGER!** It indicates a hazardous situation which, if not avoided, will result in death or serious injury.
WARNING	**WARNING!** It indicates a hazardous situation which, if not avoided, could result in death or serious injury.
CAUTION	**CAUTION!** It indicates a hazardous situation which, if not avoided, could result in minor or moderate injury.
NOTICE	**NOTICE!** It is used to address practices not related to physical injury.
Note:	**Note:** This symbol is used to highlight important information or tips.

1.4.3 Setup

1. Before the crane is raised on its supports, the axle suspension must be blocked.

2. The sliding arms of the hydraulic support jack must be extended (to a uniform length on both sides) to the extent stated in the load capacity table.

3. The sliding arms must be secured by pins.

4. It is necessary to place stable underlay material under the support pads of the support jacks over a large surface area according to ground conditions.

5. All wheels must be raised clear of the ground.

6. Use the outrigger control panel to align the crane horizontally. Horizontal positioning of the crane must also be checked from time to time and adjusted as necessary.

7. Do not travel when a crane movement is carrying out.

1.4.4 General Notes and Warning

1. The load values in the load charts are indicated in tons (t).

2. Rated loads at rated radius must not be exceeded. Do not attempt to tip the machine to determine allowable loads.

3. All rated loads have been tested to and meet the EN13000 and GB/T 3811-2008 requirements. Capacities on outriggers correspond to (Test Load = 1.25P + 0.1F). 0.1F represents one-tenth (0.10) of the total boom weight reduced to the boom head.

4. Rated loads include the weight of hook block, slings and auxiliary lifting devices and their weights shall be subtracted from the listed rating to obtain the actual load to be lifted. When more than the minimum required parts of line needed to pick the load are used, the additional rope weight as measured from the lower sheaves of the main boom nose shall be considered part of the load to be lifted.

5. Load ratings are based on freely suspended loads. No attempt shall be made to move a load horizontally on the ground in any direction.

6. Rated loads do not account for wind influence on the lifted loads or boom. If the wind speed exceeds the indicated value of permissible wind speed, crane operations must be terminated. For machines not in-service, the main boom should be retracted and lowered with swing brake set in wind velocities over permissible wind speed.

7. Do not operate at a radius or boom length where capacities are not listed. At these positions, the machine may overturn without any load on the hook.

8. The working radius is the horizontal distance of the hook block from the rotation axis of the crane superstructure, measured on the ground. The boom fixation is taken into account.

9. When the boom length or lift radius or both are between values listed, the smallest load shown at either the next larger radius or next longer or shorter boom length shall be used.

10. The user shall make due allowances for his particular job conditions, such as: soft or uneven ground, out of level conditions, high winds, side loads, pendulum action, jerking or sudden stopping of loads, experience of personnel, two machine (tandem) lifts, electric wires, obstacles, hazardous conditions, etc. Side pull on boom or jib is extremely dangerous.

11. Never handle personnel with this machine unless the requirements of the applicable national, state, and local regulations and safety codes are met.

12. Keep all load handling devices a minimum of 1 m below boom head at all times.

13. The boom angle before loading should be greater than the loaded boom angle to account for deflection.

14. Do not lift loads when boom is fully lowered. The Load Moment Indicator (LMI) senses pressure in the lift cylinder and it will not sense a warning or lockout condition. The crane can be overloaded without warning if the lift cylinder is fully retracted.

15. Before the crane is raised on its outrigger, the axle suspension must be blocked.

16. Even without a load, the telescopic boom may only be moved within the working radius ranges for which values are listed in the load charts.

1.4.5 Danger of Tipping or Risk of Overloading Situations

1. The slewing platform of an upright crane is turned away from the forward driving direction of the vehicle. Before turning the superstructure, the crane must be supported.

2. The outriggers of the crane are not properly supported and in vertical position.

3. The outrigger beams are not slid out to the exact measurement specified in the load capacity charts (on both sides).

4. The outriggers are not secured with pins.

5. The outrigger pads are not supported with the appropriate base material (surface area too small) for the soil conditions.

6. The loads and/or the working radius in the load capacity charts corresponding to telescopic length are exceeded or not met.

7. Canes are operated too close to landfills, basements and slopes.

8. The hook load begins swinging due to improper handling.

1.4.6 LMI Overload Protection

⚠ WARNING

Risk of accident!
Operators are not exempted from operation safety regulations due to the installation of overload protection devices.
• Before lifting a load, determine its approximate weight, and with the help of the load chart, decide whether the crane is in a position to carry out this job.
• Strictly follow the instructions prescribed in the SOM manual for the proper use of the LMI.
• Do not use the LMI overload protection as operational shut off device.
•The overload protection cannot cover all possible operational conditions. Carry out all crane movements with utmost caution.

The Load Moment Indicator (LMI) system is an integrated system that provides comprehensive protection for the lifting operation and alarm the operator if the crane is overloaded, guaranteeing operation safety. It is a computer system for controlling and monitoring the mobile crane. It utilizes the superstructure controller, the display, and the test devices ((length sensor, angle sensor, wind speed sensor, pressure sensor, third wrap

protector and anti-two block switch) to achieve protective functions.

The LMI load protection switches off all crane movements that increase the load torque when the rated load torque is exceeded. Only crane movements that reduce load torque can be made.

Before every crane application:

1. Set the LMI overload protection for function to the current set up configuration, in accordance with the load chart. Only that way can it fulfil its protective task.

2. Check the LMI overload protection for function.

3. Check all test devices (length sensor, angle sensor, wind speed sensor, pressure sensor, third wrap protector and anti-two block switch) for function.

4. Check all limit switches for function.

5. Confirm the weight of load before hoisting.

The crane manufacturer shall not be responsible for the direct and indirect damage of the crane caused by the failure of LMI overload protection or manual closing of the LMI.

1.4.7 Safety Devices

⚠ WARNING
Risk of accident or property damage! Incorrect use of safety devices will cause crane tipping over, boom snapping off and other unforeseeable accidents resulting in property damage and personnel injury. Strictly follow the instructions prescribed in the manual for the proper use of the safety devices. Make sure that all warning and safety devices are functioning before crane application.

1. Anti-two block (A2B) switch: the A2B switch is a height limiter applied to both boom and jib end. It prevents over-hoisting of the wire rope so as to avoid the hook from colliding with the pulley at the boom nose or jib end during the hoisting process.

2. Third wrap protector: it prevents wire rope spool off, ensuring three wraps remain on the hoist drum. When there is only one wrap of wire rope left on hoist drum, it is necessary to visually check if third wrap protector is in normal working state. If the winch is overwind in the lifting direction, or the wire rope is replaced, third wrap protector needs to be reset before continuing to work.

3. Length sensor, angle sensor and pressure sensor: the sensors on the crane indicate the working condition of whole crane in real-time, giving an alarm and cutting off the dangerous action automatically.

4. Tricolor lights: tricolor lights (green, yellow and red) indicate the loading status of the crane:

• Green light: the actual load is below 90% of the rated load, indicating a normal working state.

• Yellow light: the actual load is between 90%–100% of the rated load, indicating a risky operating state. It requires the control confirmation to continue work.

• Red light: the actual load exceeds 100% of the rated load, indicating a dangerous operating state that calls for immediate attention and sounds the alarm.

5. Turntable locking device: before driving the crane, ensure the turntable lock pin is engaged; before operate the crane, ensure the turntable lock pin is released.

The crane manufacturer shall not be responsible for accidents or damage of the crane caused by the failure of safety devices or manual closing of the them.

1.5 Influence Factors for Crane Capacity

1.5.1 Influence of Wind Speed

⚠ DANGER

Risk of cane tip over!
When the crane is operated beyond the maximum permissible wind speed in load chart, it may cause the crane tipping and people death.
If the wind speed exceeds the maximum permissible wind speed in load chart, all accessories must be removed and the boom must be retracted.
If the wind speed exceeds the maximum permissible wind speed of operation in load chart, lifting operation is prohibited at this time.

Wind velocities and their effects:

Wind force		Wind speed		Effect of wind in-land
Beaufort	Description	[m/s]	[km/h]	
0	Calm	0-0.2	1	No wind, smoke rises straight up
1	Slight air (draft)	0.3-1.5	1-5	Wind direction is shown only by observing the trail of smoke, not by the wind sock

Wind force		Wind speed		Effect of wind inland
Beaufort	Description	[m/s]	[km/h]	
2	Light breeze	1.6-3.3	6-11	Wind can be felt on the face, the leaves rustle, wind sock moves slightly
3	Gentle breeze	3.4-5.4	12-19	Leaves and thin twigs move, wind extends a small breeze flag
4	Moderate breeze	5.5-7.9	20-28	Swirls up dust and loose paper, moves twigs and thin branches
5	Fresh breeze	8-10.7	29-38	Small deciduous trees begin to sway, foam forms at sea
6	Strong breeze	10.8-13.8	39-49	Thicker branches move; telephone lines begin to whistle, umbrellas are difficult to use
7	Stiff wind	13.9-17.1	50-61	Entire trees swaying; difficult to walk into wind
8	Gale force wind	17.2-20.7	62-74	Breaks twigs off trees, walking becomes difficult
9	Gale	20.8-24.4	75-88	Minor damage to property (chimney tops and roofing tile are blown off)
10	Severe gale	24.5-28.4	89-102	Trees are uprooted, significant damage to property

Wind force		Wind speed		Effect of wind inland
Beaufort	Description	[m/s]	[km/h]	
11	Violent storm	28.5-32.6	103-117	Extensive, widespread storm damage
12	Hurricane	32.7-36.9	118-133	Major destruction

Wind speed restrictions:

If the wind speed is:	Rated lifted capacities must be reduced by at least:
＜ 8.3m/s（30km/h）	Normal lifting operations (refer to load chart).
8.3m/s-13.3m/s（30km/h-48km/h）	40%
＞ 13.3m/s （48km/h）	Cease all craning operations, lower and retract boom. NOTE: If the specific permissible wind speed is indicated in load charts, the permissible wind speed in load charts shall prevail.
＞ 8.3m/s（30km/h）	Jib lift operation must be stopped.
Additional reductions are required for loads with large wind sail area. These restrictions are based on crane on fully extended outriggers.	

NOTE:

All load handling devices and boom attachments are deemed as part of the load. Suitable allowances must be made for their combined weights. Weights listed are for SANY furnished equipment.

1.5.2 Permissible Ground Pressure

Check the geotechnical conditions of supporting ground in the working area before operation, including ground firmness and bearing capacity. Detect the bearing capacity of each supporting points if overall condition of ground is not clear. If ground pressure at the supporting position is insufficient, steel plates or sleepers should be padded to expand the bearing area and reduce bearing stress.

Soil type			Maximum permissible ground pressure MPa
Uncompacted rubble and debris			0-0.1
Natural soil in virgin land	Muddy road, wetland, wilderness		0
	Cohesive soil	Sand, gravel and rocky areas	0.2
		Muddy	0
		Soft	0.04

Soil type			Maximum permissible ground pressure MPa
		Stiff	0.1
		Semi-solid	0.2
		Solid	0.4
	Unweathered micro-cracked rock in good condition	Compacted formation	1.5
		Stratum formed by rocky granular rocks	3.0

Example: calculation of specific support pressure	
If maximum support reaction force: 720 KN	720000N
Calculated side length: 550 mm / square area of outrigger : 302500 mm^2	3025cm^2
The 80% force area of support plate: 242000mm^2	2420cm^2
Specific support pressure = support force/support area	720000N/2420cm^2=297.52N/cm^2
Specific support pressure	298N/cm^2=2.98MPa

1.6 Symbols and codes

1.6.1 Symbols and Codes above Load Chart

Symbols and codes above load chart indicate operating mode information which includes boom/jib combinations, counterweight position, outriggers condition, jib length, counterweight size, slewing rang, superlift angle, eccentric length and so on.

NOTE:

All symbols and codes representing operating modes are listed below, but not all of them are used for the crane.

Symbols and codes for boom/jib combinations

No.	Symbol and code	Description
1		Telescopic boom
2		Jib

Symbols and codes for outriggers condition

No.	Symbol and code	Description
1		Outriggers 100% Extended
2		Outriggers 50% Extended
3		Outriggers 0% Extended
4		Stationary and on Tires (applicable for rough terrain crane operating mode)
5		Travel with loads and the maximum travel speed of vehicle should be limited to 4 km/h. It is imperative that the load weights in the tables are adhered to. NOTE：The numerical value in the symbol is an example do not necessarily match exactly to the crane.

Symbol and code for counterweight size

No.	Symbol and code	Description	Remark
1		Counterweight: 54.5 t.	The size of counterweight is indicated in metric tons (t), which must be on the crane superstructure in order to achieve the values of the given load chart. NOTE: The numerical value in the symbol is an example do not necessarily match exactly to the crane.

Symbol and code for jib length

No.	Symbol and code	Description
1		Jib length: 23.2 m. In this symbol, the length of jib is indicated in meters (m), which must be installed in order to achieve the values of the given load chart. NOTE：The numerical value in the symbol is an example do not necessarily match exactly to the crane.

Symbols and codes for slewing range

No.	Symbol and code	Description
1		Unrestricted slewing possible
2		Boom operating range to the front

1.6.2 Symbols and Codes in Load Chart

Symbols and codes inside load chart indicate limitation descriptions for operating modes which includes telescopic boom length, working radius, permissible wind speed, weight of hook block, parts of line, offset angle and so on.

NOTE：

All symbols and codes specifying limitation descriptions for operating modes are listed below, but not all of them are used for the crane.

No.	Symbol and code	Description	Remark
1		Telescopic boom length and working radius	Length unit is (m).
2		Jib length and jib angle	Length unit is (m), angle unit is (°).
3		Offset angle	Indication of the angle at which the jib is mounted to the telescopic boom.
4		Rated load capacity	Load unit is (t).
5		Working radius	Length unit is (m).
6		Telescopic boom angle	Boom angle of crane.
7		Extension conditions of the telescopic boom sections	Indications in percentage for the extension condition of individual telescopic sections.

No.	Symbol and code	Description	Remark
8		Permissible wind speed	Indication of wind speed up to which crane operation is permissible depending on boom length. If the wind speed exceeds the indicated value, crane operations must be terminated, and if necessary, equipment must be removed from the crane. The letters “m/s” indicate the units of measurement for wind speed.
9		Weight of hook block / headache ball	Indication of the weight of hook block / headache ball that used to achieve the values of the given load chart. The letters “t” indicate the units of measurement for hook block / headache ball weight.
10		Minimum boom angle	Indication of the minimum boom angles “°” to which crane operation is permissible depending on boom length. If the boom angle is less than the indicated value, crane may tip over.
11		Maximum boom angle	Indication of the maximum boom angles “°” to which crane operation is permissible depending on boom length. If the boom angle exceeds the indicated value, crane may tip over.
12		Maximum capacity at minimum boom angle	Indication of the maximum capacity at minimum boom angles to which crane operation is permissible depending on boom length. If the capacity exceeds the indicated value at the certain minimum boom angle, crane may tip over. The letters “t” indicate the units of measurement for load capacity.

No.	Symbol and code	Description	Remark
13		Maximum capacity at minimum boom angle	Indication of the maximum capacity at maximum boom angles to which crane operation is permissible depending on boom length. If the capacity exceeds the indicated value at the certain maximum boom angle, crane may tip over. The letters "t" indicate the units of measurement for load capacity.
14		Parts of line	Indication for the required number of hoisting wire rope reevings (parts of line) required to achieve a certain load capacity.

1.7 Configuration

1.7.1 Operating modes

Explanation of operating mode symbols and codes used for this crane

No.	Symbol and code	Description
P		Power telescopic boom
T		Telescopic boom operating mode
TJ	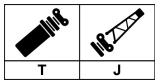	Telescopic boom + jib operating mode
TA	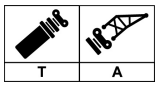	Telescopic boom+Auxiliary jib
TN	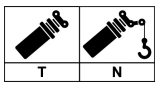	Telescopic boom+Auxiliary boom nose

1.7.2 Telescopic Boom

1. The lifting capacity for the telescopic boom is limited, do not exceed the load values in the load charts.

2. Telescope the telescopic boom without a load to the desired length and then load.

3. Move the telescopic boom only in the defined radius range according to the load chart, even without a load.

4. Telescoping under partial load is possible when the load chart provides “Telescoping under partial load” and the bearing shoes are sufficiently greased.

1.7.3 Variations of Fixed Lattice Jib

⚠ DANGER

Risk of crane tipping over!
The crane will topple, if another variation of fixed jib is used than specified in the manual.
Strictly stick to the variations illustrated in the manual.

There are three different offset angles for the jib: 0°, 20°, and 40°.

9.2 m mechanical jib

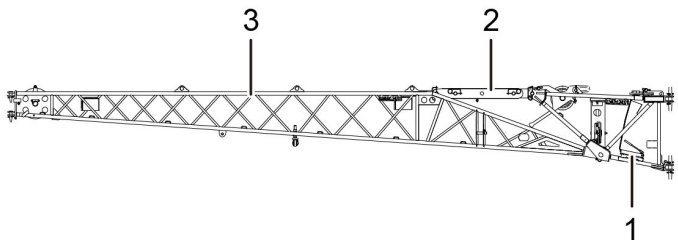

1. Auxiliary assembly device
2. Mechanical luffing assembly
3. Lattice tip section

16 m mechanical jib

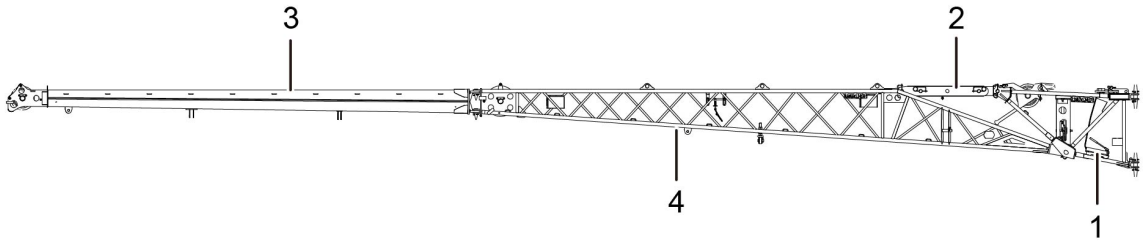

1. Auxiliary assembly device
2. Mechanical luffing assembly
3. Fixed jib
4. Lattice tip section

9.2 m hydraulic jib

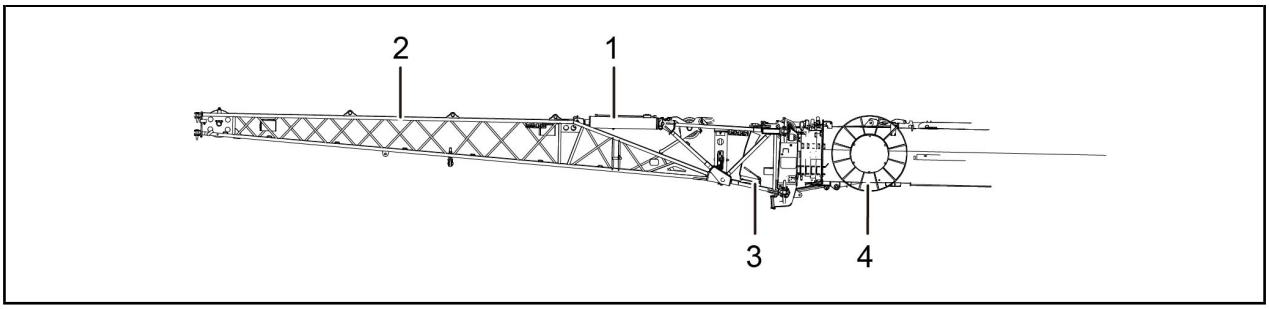

1. Jib luffing cylinder
2. Lattice tip section
3. Auxiliary assembly device
4. Hose drum

16 m hydraulic jib

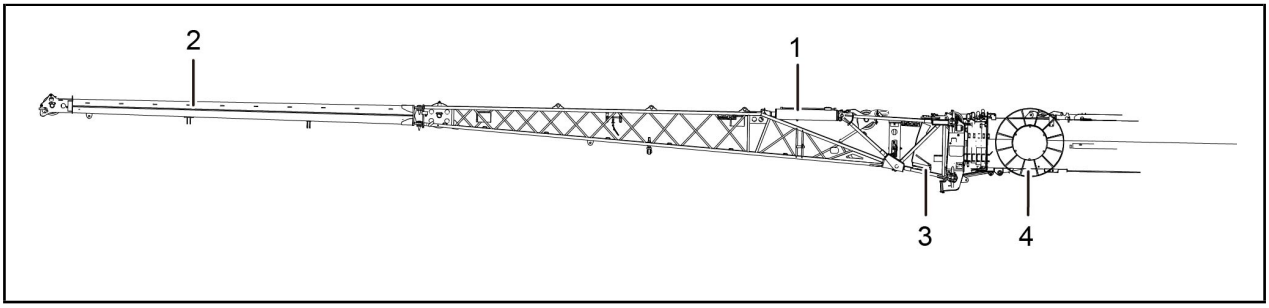

1. Jib luffing cylinder
2. Fixed jib
3. Auxiliary assembly device
4. Hose drum

1.7.4 Counterweight

Overview of counterweight

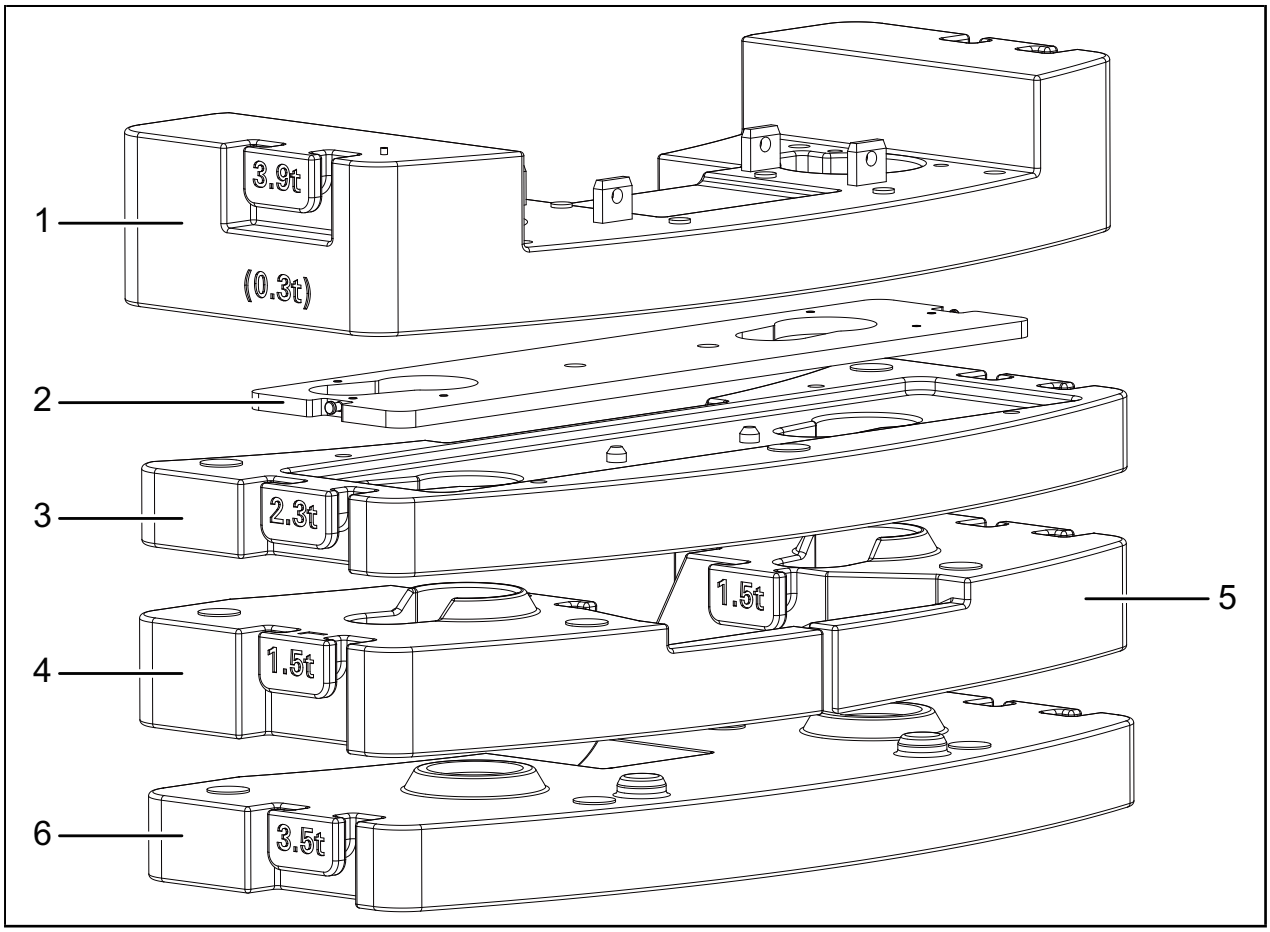

1. Counterweight plate 1 - 3.9t
2. Counterweight plate 2 - 0.3t
3. Counterweight plate 3 - 2.3t
4. Counterweight plate 4 - 1.5t
5. Counterweight plate 5 - 1.5t
6. Receptacle plate - 3.5t

NOTE:

The counterweight distribution must be performed prior to driving on public roads. The counterweight plates are marked with their own weights.

Counterweight combinations

Total weight (t)	Combination	Combination
3.9	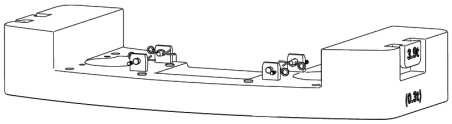	1. Counterweight plate 1 (3.9 t)
4.2	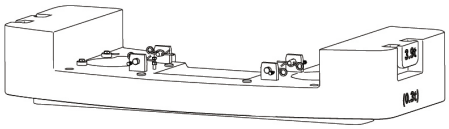	1. Counterweight plate 1 (3.9 t) 2. Counterweight plate 2 (0.3 t)
6.5	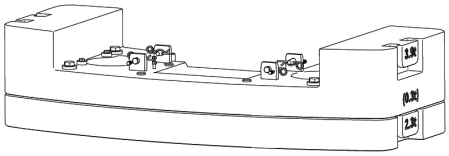	1. Counterweight plate 1 (3.9 t) 2. Counterweight plate 2 (0.3 t) 3. Counterweight plate 3 (2.3 t)
10	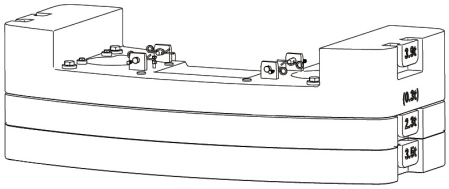	1. Counterweight plate 1 (3.9 t) 2. Counterweight plate 2 (0.3 t) 3. Counterweight plate 3 (2.3 t) 4. Counterweight plate 6 (3.5 t)
13	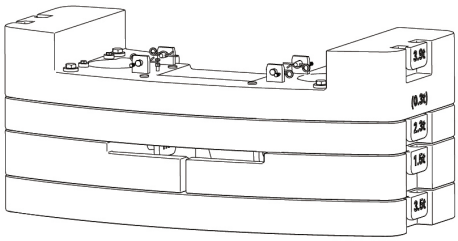	1. Counterweight plate 1 (3.9 t) 2. Counterweight plate 2 (0.3 t) 3. Counterweight plate 3 (2.3 t) 4. Counterweight plate 4 (1.5 t) 5. Counterweight plate 5 (1.5 t) 6. Counterweight plate 6 (3.5 t)

Counterweight combinations

⚠ DANGER

Risk of crane tipping over!
The crane may topple, if another counterweight combination is used than specified in the manual.
Strictly stick to the counterweight combinations illustrated in the manual.

A visual check for damages and foreign matter must be performed prior to the assembly and/or the disassembly of the counterweight plates. Replace damaged counterweight plates.

When depositing the counterweight plate on the centering cone and stacking the counterweight plates, no foreign matter may be located between the counterweight plates.

1.7.5 Wire Rope

Hoist and Wire Rope			
Item	Max.single rope lifting speed (empty load)	Rope diameter/length	Max. single line pull
Main hoist	130 m/min	15 mm/220 m	4.8 t
Auxilary hoist	130 m/min	15 mm/220 m	4.8 t

Maximum load-bearing of wire rope

Unit: (t)

n	1	2	3	4	5	6	7	8	9	10
Weight	4.8	9.5	14.2	18.7	23.2	27.7	32.1	36.4	40.6	44.8
n	11	12	13	14						
Weight	48.9	53.0	57.0	60.9						

Installation of wire rope

1. Wire rope must be installed between boom head and hook, and it should be properly selected based on the lifting weight and the maximum tension that can be carried by the winch.
2. If multiple strands of wire rope have been installed, the friction between the wire rope and the pulley will cause the net weight of lifting to decrease.
For example:the tension of wire rope is 105kn, and 10 wire rope strands(1050kN, i.e. 106t) can only lifte 983kN (i.e. 99.2t).
3. The overload protection must be set to the number of wire rope strands .
4. If the hook is operated with the number of wire ropes more than required in the manual, the wire rope will be disordered due to insufficient hook weight in the process of descending.

1.7.6 Hook Block

Equipped Hook block

Load Capacity (t)	Sheave Quantity	Max. Parts of Line	Weight (kg)
6.3	0	1	108
16	1	3	215
32	3	7	322
50	5	11	406
63	7	14	455

NOTE:

Pay attention to wire rope damage caused by insufficient hook weight . If the hook block weight selected fail to provide sufficient wire rope tension, the wire rope may be disordered when raising and lowering the hook, which would result in damages on the wire rope.

Accessory counterweight can be added to the hook block to avoid wire rope disorder if necessary and they must be removed if any problem arises by them during the process of installation or assembly.

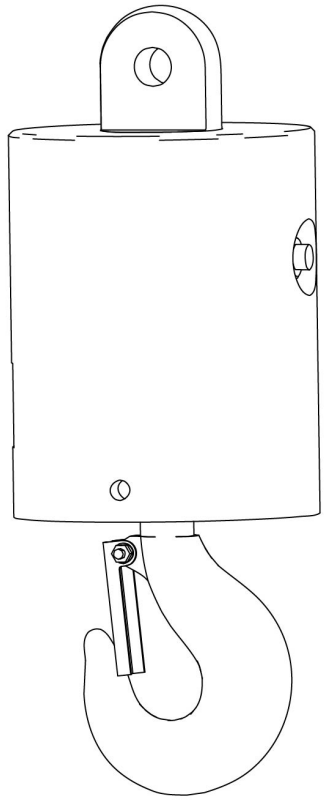

Diagram 6.3T Headache Ball

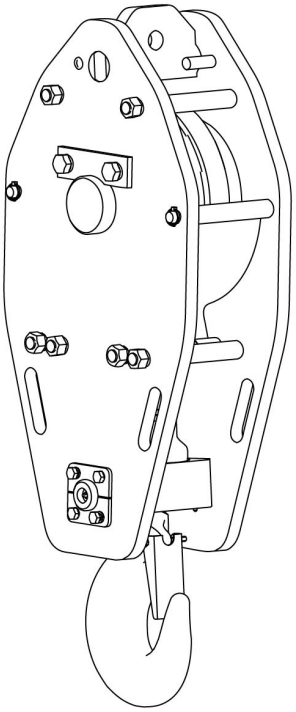

Diagram of 16T Hook Block

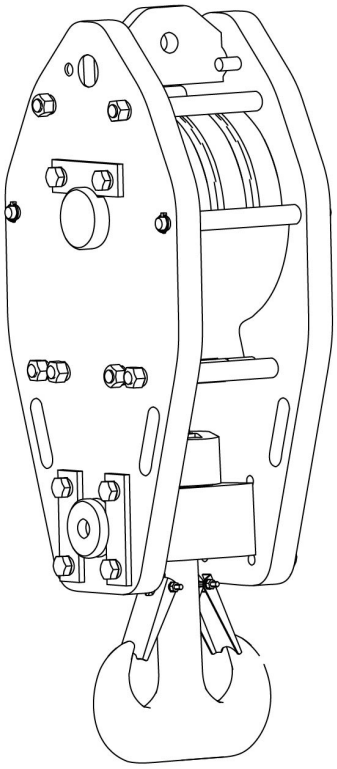

Diagram of 32T Hook Block

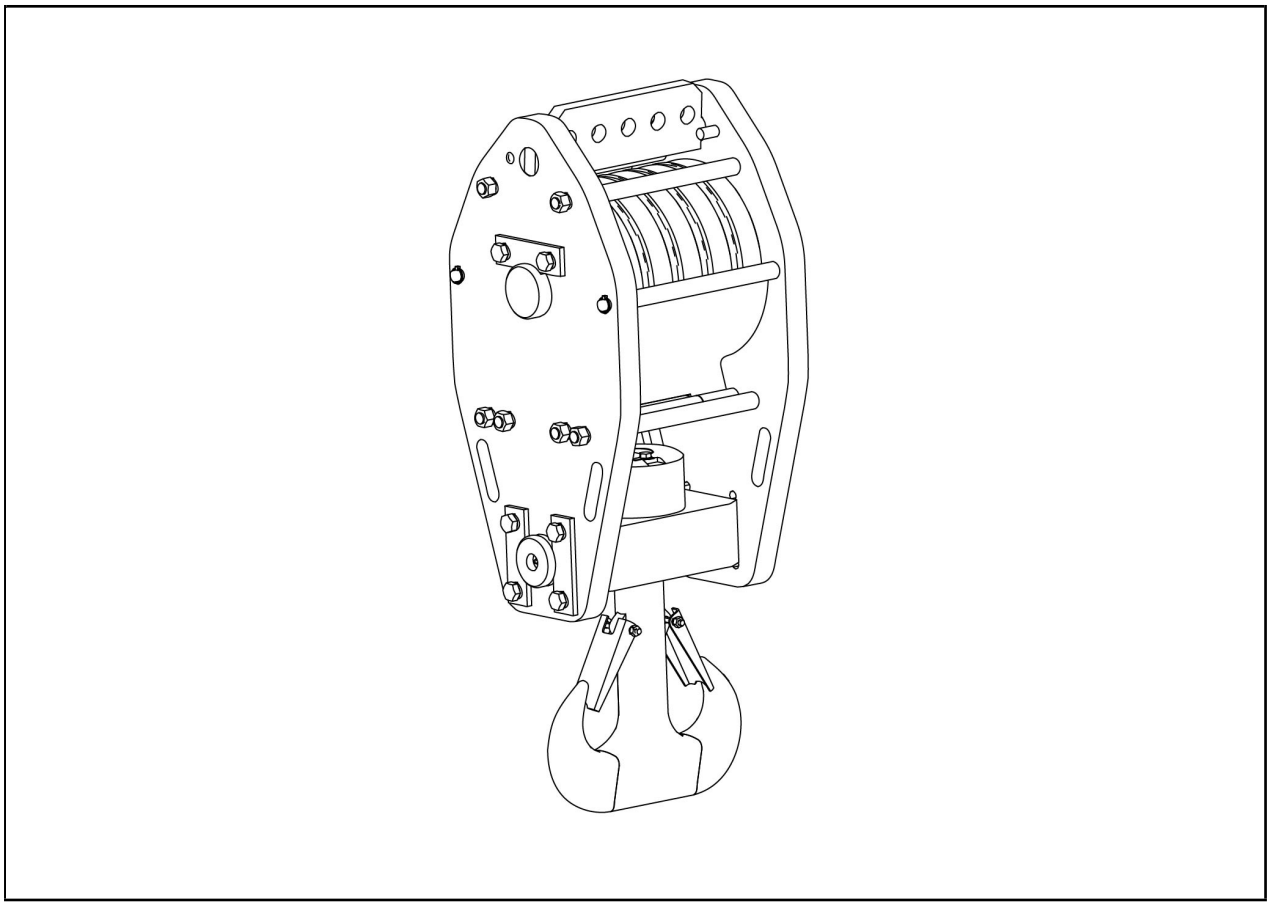

Diagram of 50T Hook Block

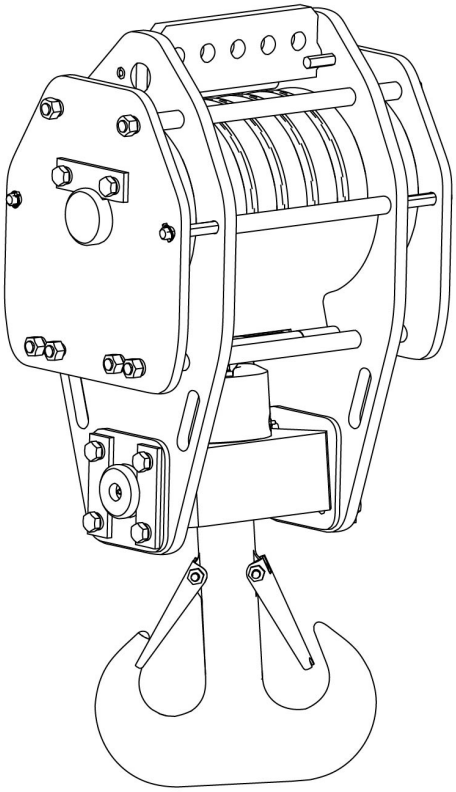

Diagram of 63T Hook Block

Calculation of the minimum required hook block weight

DANGER

Risk of parts or lifting hook falling!
If the lifting hook is not equipped with enough weight, once reaching a certain lifting height, the lifting hook will be violently screwed upward by the winch wire rope between the arm head and the winch, which may cause damage to the boom head or the lifting hook. Damaged parts, including the wire rope between the boom and the winch, are likely to fall. If the wire rope between the boom head and the winch is loose due to the winch traction failure, the lifting hook may fall down without any alarm, resulting in serious injuries and death!
Calculate the required minimum hook weight before lifting a load. If the hook weight is not insufficient, the corresponding counterweight should be added on the basis of the calculation results.

WARNING

Risk of wire rope damage!
Insufficient weight of lifting hook may cause damage to wire rope. If hook is used at a rate higher than the specified rate in load chart, the required minimum hook weight shall be increased accordingly. If the weight of the lifting hook is not enough to provide the required tension to the wire rope, the wire rope will be damaged due to the slack of the wire rope during the lifting the hook up or down .
Calculate the required minimum hook weight before lifting a load. If the hook weight is not insufficient, the corresponding counterweight should be added on the basis of the calculation results.

Insufficient hook weight may cause the wire rope to slack (the wire rope may be damaged when raising and lowering the hook) or may result in the hook failing to lower down relying on its own weight. Therefore, the minimum hook weight shall be calculated and the hook weight shall be configured based on the minimum hook weight.

Calculation formula：G=L×M×N×F

Symbol	Description	Weight
G	Minimum hook weight	kg
L	Overall length of boom	m
M	Wire rope weight per meter	kg/m
N	Parts of line	-
F	Weight factor	-

1. Wire rope weight and diameter comparison table:

Wire rope diameter	Wire rope weight M
15 mm	1.102 kg/m

NOTE：

The structure of the wire rope is 35×K7-IWR. The wire rope weight shown in the chart above refers to the B65 model in the Diepa sample, and it should be adjusted according to the practical wire rope weight.

2. Weight factor:

Part of line	Weight factor F
1	1.31
2	1.34
3	1.36
4	1.39
5	1.41
6	1.44
7	1.46
8	1.49
9	1.52
10	1.54
11	1.57
12	1.60
13	1.63
14	1.65

3. Calculation example:

Crane configuration	
Boom length	46.4 m
Extension arm length of main boom	12.5 m
Wire rope diameter	28 mm
Parts of line	7

According to the weight coefficient table, the weight coefficient of 7 parts is 1.46G=Gmin×1.1=2607kg

The minimum weight of the hook is:

Gmin=L×M×N×F=58.9×3.94×7 ×1.46=2371.7kg

NOTE:

The minimum calculated weight of the hook shall be increased by 10%, which is used to provide pre-tension when the wire rope is in hoist drum.

G=Gmin×1.1=2607kg

Working Range Diagram

2 Working Range Diagram 2-3

2.1 T/P 2-3

2.2 TJ (9.2m) 2-4

2.3 TJ (16m) 2-5

2.4 TA 2-6

BLANK PAGE

2. Working Range Diagram

2.1 T/P

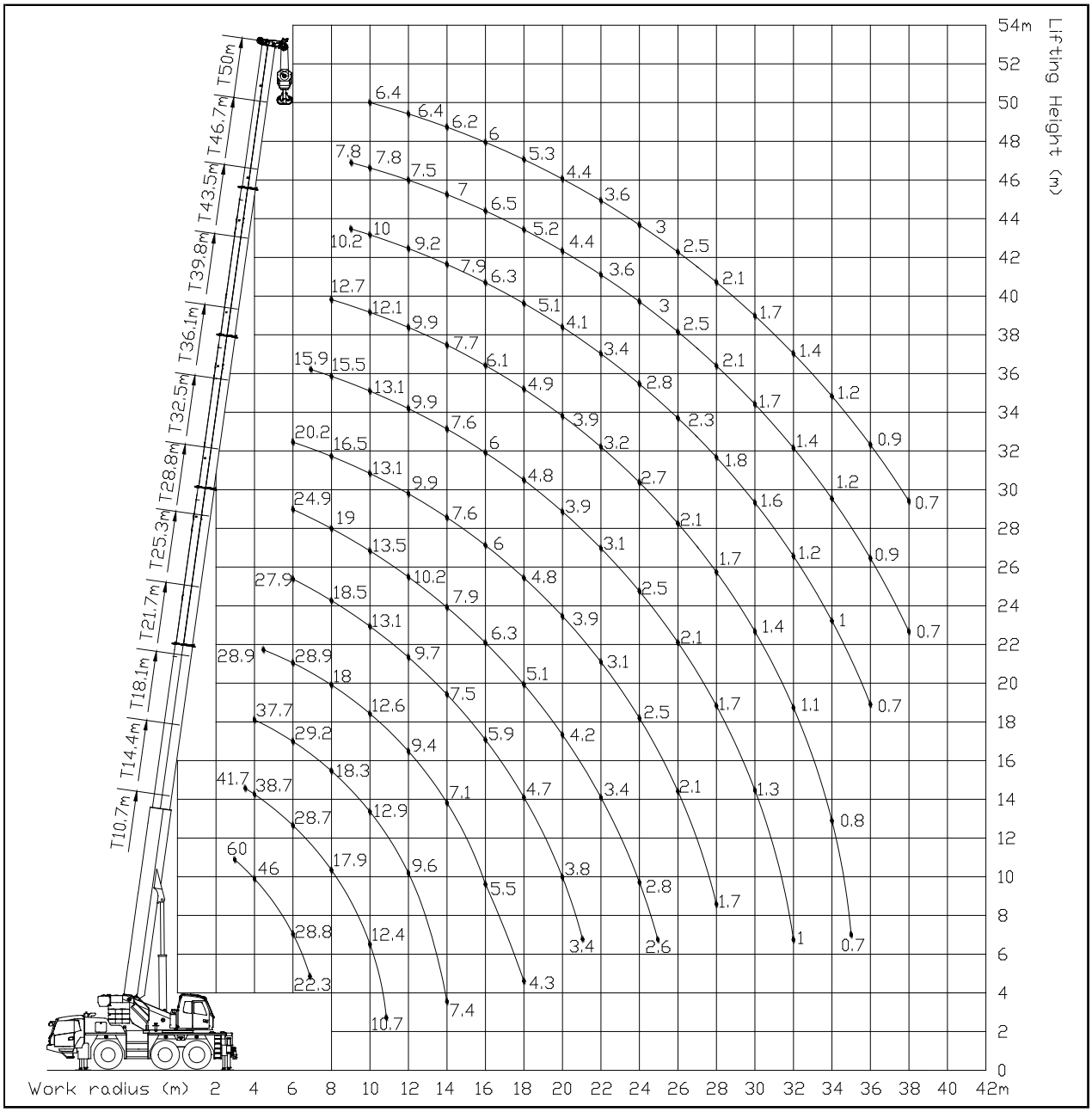

2-1 Telescopic boom/Power telescopic boom

2.2 TJ (9.2m)

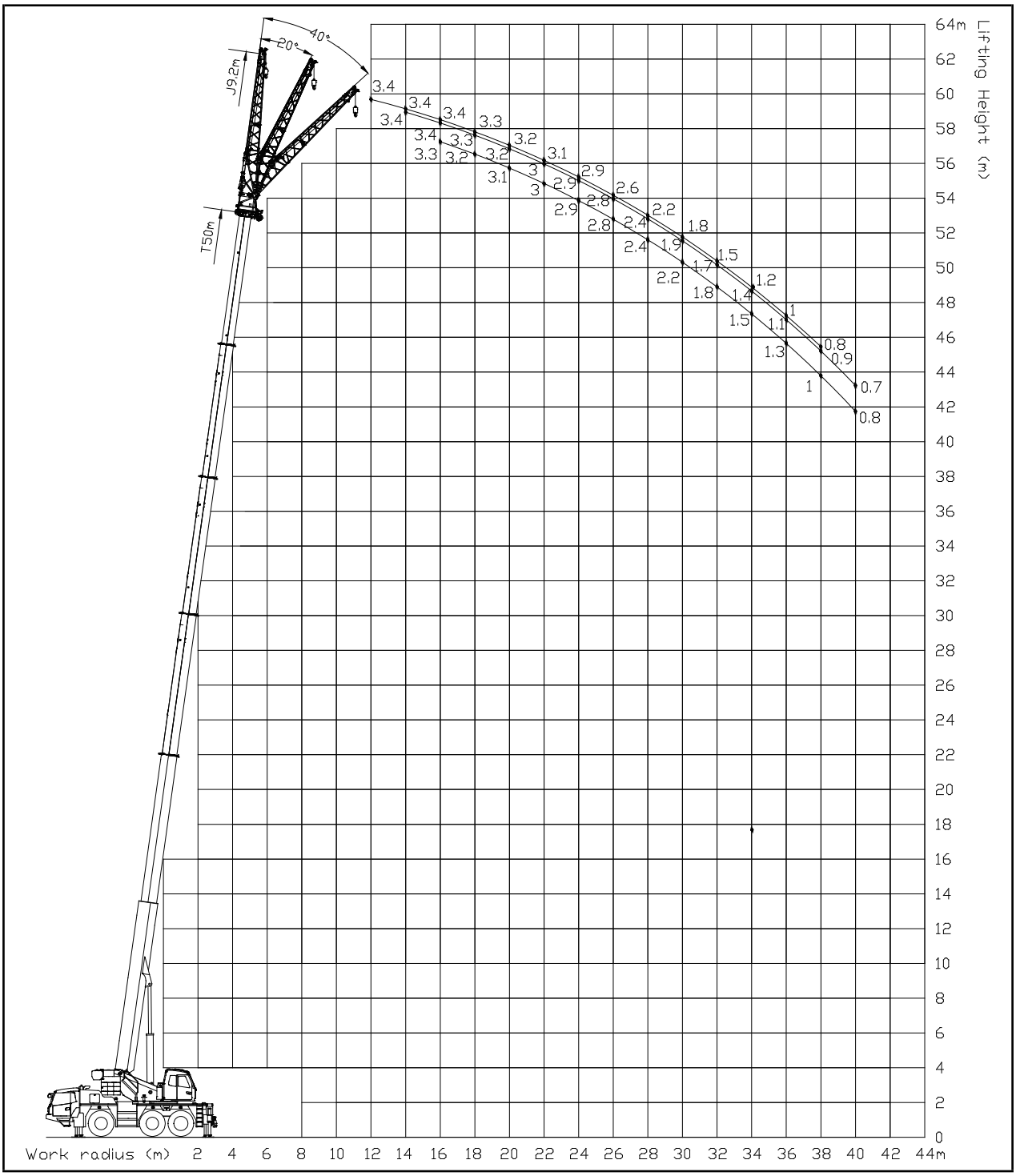

2-2 Telescopic boom + Jib

2.3 TJ (16m)

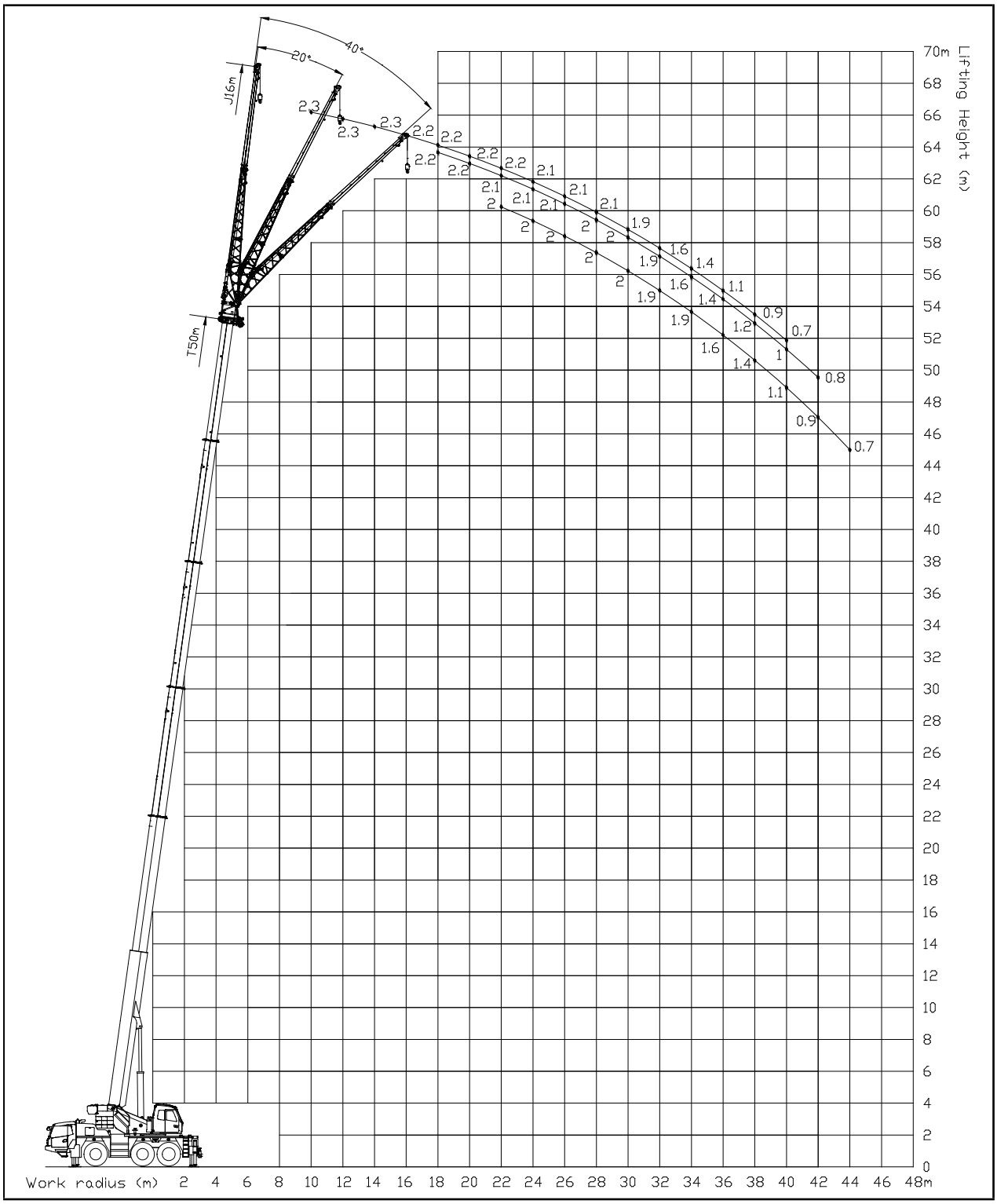

2-3 Telescopic boom + Extension section + Jib

2.4 TA

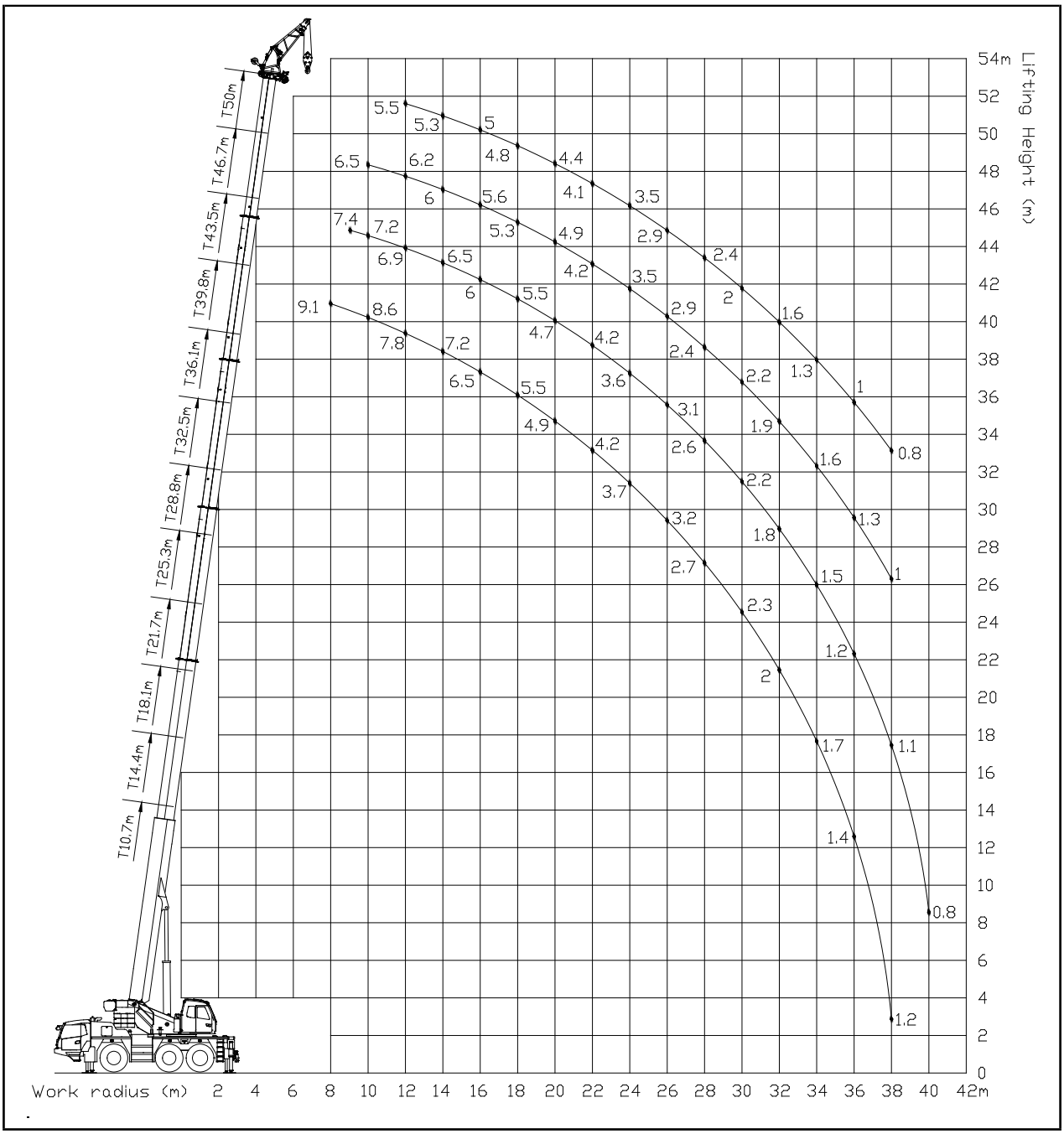

2-4 Telescopic boom + Auxiliary jib

Power telescopic boom(P)

3 Power telescopic boom(P) 3-3

3.1 Outrigger 100% extended 3-3

3.1.1 Counterweight 13 t 3-3

BLANK PAGE

P

P unit：t

360° 100% 13 t

m	10.7											
3.0	60.0											
3.5	50.0											
4.0	46.0											
4.5	42.2											
5.0	37.0											
6.0	28.8											
7.0	22.3											
8.0												
9.0												
10.0												
12.0												
14.0												
16.0												
18.0												
20.0												
22.0												
24.0												
26.0												
28.0												
30.0												
32.0												
34.0												
36.0												
38.0												
40.0												
n	14											
% 2#	0											
% 3#	0											
% 4#	0											
% 5#	0											
% 6#	0											
m/s	9											

BLANK PAGE

Telescopic boom(T)

4 Telescopic boom(T) 4-3

4.1 Outrigger 100% extended 4-3

4.1.1 Counterweight 13 t 4-3

4.1.2 Counterweight 10 t 4-6

4.1.3 Counterweight 6.5 t 4-9

4.1.4 Counterweight 4.2 t 4-12

4.1.5 Counterweight 3.9 t 4-15

4.2 Outrigger 50% extended 4-18

4.2.1 Counterweight 13 t 4-18

4.2.2 Counterweight 10 t 4-21

4.2.3 Counterweight 6.5 t 4-24

4.2.4 Counterweight 4.2 t 4-27

4.2.5 Counterweight 3.9 t 4-30

BLANK PAGE

T

T unit：t

360° 100% 13 t

m / m	10.7	14.4	14.3	14.2	18.0	17.9	17.8	17.7	21.7	21.4	21.2	25.3
3.0	52.8											
3.5	50.0	41.7	36.5	21.4								
4.0	46.0	38.7	36.0	20.8	37.7	34.8	26.0	15.0				
4.5	42.2	36.1	34.5	20.0	35.2	34.3	24.0	14.2	35.0	30.0	16.0	
5.0	37.0	33.9	32.0	19.2	33.0	32.0	22.7	13.2	32.7	28.4	15.5	
6.0	28.8	28.7	25.2	18.0	29.2	28.8	20.0	12.0	28.9	25.5	13.8	27.9
7.0	22.3	22.2	23.0	16.2	22.6	23.3	19.1	10.8	22.3	22.0	11.9	22.8
8.0		17.9	18.6	14.4	18.3	18.9	17.0	9.5	18.0	19.2	10.5	18.5
9.0		14.7	15.4	12.8	15.2	15.8	15.3	8.2	14.9	16.2	9.2	15.4
10.0		12.4	13.1	11.0	12.9	13.4	13.5	7.0	12.6	13.9	8.2	13.1
11.0		10.7	11.0	10.0	11.1	11.5	12.0	6.5	10.8	12.0	7.5	11.2
12.0					9.6	10.1	10.5	6.0	9.4	10.6	6.8	9.7
13.0					8.4	8.9	9.3	5.5	8.2	9.4	6.1	8.6
14.0					7.4	7.9	8.3	5.0	7.1	8.4	5.6	7.5
15.0									6.3	7.5	5.0	6.6
16.0									5.5	6.7	4.8	5.9
17.0									4.9	6.0	4.5	5.2
18.0									4.3	5.5	4.0	4.7
19.0												4.2
20.0												3.8
21.0												3.4
22.0												
23.0												
24.0												
25.0												
26.0												
27.0												
28.0												
29.0												
30.0												
31.0												
32.0												
33.0												
34.0												
n	11	10	10	10	9	9	9	9	8	8	8	7
% 2#	0	0	0	0	0	0	0	0	46	0	0	46
% 3#	0	46	0	0	46	0	0	0	46	0	0	46
% 4#	0	0	0	0	46	46	0	0	46	46	0	46
% 5#	0	0	46	0	0	46	46	0	0	46	46	46
% 6#	0	0	0	46	0	0	46	92	0	46	92	0
m/s	14.3	14.3	14.3	14.3	14.3	14.3	14.3	14.3	12.8	12.8	12.8	12.8

T

T unit：t

360° 100% 13 t

m / m	25.1	24.9	24.8	28.8	28.6	28.5	32.4	32.2	32.1	32.1	36.1	35.8
6.0	25.5	16.7	13.0	24.9	17.8	16.0	20.2	18.0	17.0	13.6		
7.0	23.7	15.6	12.0	23.4	16.5	14.5	18.2	16.8	15.5	12.5	15.9	15.5
8.0	19.3	14.2	11.0	19.0	15.5	12.5	16.5	15.9	14.3	11.0	15.5	15.0
9.0	16.1	12.5	10.0	15.8	14.5	11.5	14.8	15.0	13.3	10.0	14.9	14.0
10.0	13.8	11.2	9.0	13.5	13.5	10.0	13.1	13.8	12.5	9.0	13.1	13.0
11.0	12.0	10.0	8.2	11.6	12.1	9.0	11.3	12.0	11.5	8.2	11.3	12.2
12.0	10.4	9.1	7.5	10.2	10.8	8.2	9.9	10.5	10.7	7.6	9.9	10.7
13.0	9.3	8.1	6.8	9.0	9.5	7.6	8.7	9.3	9.7	7.2	8.6	9.5
14.0	8.2	7.4	6.2	7.9	8.6	7.0	7.6	8.3	8.7	6.8	7.6	8.5
15.0	7.3	6.8	5.6	7.0	7.6	6.4	6.7	7.4	7.8	6.2	6.7	7.6
16.0	6.5	6.4	5.2	6.3	6.9	5.9	6.0	6.6	7.0	5.7	6.0	6.8
17.0	5.9	6.1	4.8	5.6	6.3	5.5	5.4	6.0	6.4	5.3	5.4	6.2
18.0	5.3	5.7	4.5	5.1	5.7	5.1	4.8	5.4	5.8	5.0	4.8	5.5
19.0	4.9	5.3	4.2	4.6	5.2	4.8	4.3	4.9	5.3	4.7	4.3	5.1
20.0	4.5	4.9	4.0	4.2	4.7	4.5	3.9	4.5	4.9	4.4	3.9	4.6
21.0	4.0	4.5	3.8	3.7	4.3	4.2	3.5	4.1	4.4	4.1	3.5	4.2
22.0				3.4	4.0	4.0	3.1	3.7	4.1	3.9	3.1	3.9
23.0				3.1	3.7	3.8	2.9	3.4	3.8	3.7	2.8	3.6
24.0				2.8	3.4	3.6	2.5	3.1	3.5	3.5	2.5	3.2
25.0				2.6	3.1	3.4	2.3	2.9	3.3	3.3	2.3	3.0
26.0							2.1	2.6	3.0	3.0	2.1	2.8
27.0							1.8	2.4	2.8	2.8	1.8	2.5
28.0							1.7	2.2	2.6	2.6	1.7	2.3
29.0											1.4	2.2
30.0											1.3	2.0
31.0											1.1	1.8
32.0											1.0	1.6
33.0												
34.0												
35.0												
36.0												
37.0												
38.0												
39.0												
C_n	7	7	7	6	6	6	5	5	5	5	4	4
% 2#	0	0	0	46	0	0	92	46	0	0	92	46
% 3#	46	0	0	46	46	0	46	46	46	0	92	46
% 4#	46	46	0	46	46	46	46	46	46	92	46	46
% 5#	46	46	92	46	46	92	46	46	92	92	46	92
% 6#	46	92	92	46	92	92	46	92	92	92	46	92
m/s	12.8	12.8	12.8	12.8	12.8	12.8	11.1	11.1	11.1	11.1	11.1	11.1

T

T unit：t

360° 100% 13 t

m \ m	35.7	39.7	39.6	39.4	39.4	43.3	43.1	46.8	50.0			
7.0	13.7											
8.0	12.8	12.7	12.5	11.8	10.7							
9.0	12.5	12.5	11.5	10.9	9.8	10.2	9.8	7.8				
10.0	12.0	12.1	10.6	10.1	9.0	10.0	9.5	7.8	6.4			
11.0	11.0	11.4	10.2	9.4	8.5	9.7	9.0	7.7	6.4			
12.0	10.2	9.9	10.0	9.2	8.3	9.2	8.7	7.5	6.4			
13.0	9.4	8.8	9.2	9.0	8.1	8.9	8.3	7.2	6.4			
14.0	8.6	7.7	8.2	8.4	8.0	7.9	8.0	7.0	6.2			
15.0	7.8	6.9	7.3	7.6	7.7	7.0	7.5	6.8	6.1			
16.0	7.0	6.1	6.5	6.8	6.9	6.3	6.7	6.5	6.0			
17.0	6.4	5.4	5.8	6.1	6.3	5.6	6.0	5.8	5.8			
18.0	5.8	4.9	5.3	5.6	5.6	5.1	5.5	5.2	5.3			
19.0	5.3	4.4	4.8	5.1	5.2	4.6	5.0	4.8	4.8			
20.0	4.9	3.9	4.3	4.6	4.7	4.1	4.6	4.4	4.4			
21.0	4.5	3.6	4.0	4.3	4.3	3.8	4.2	3.9	4.0			
22.0	4.1	3.2	3.6	3.9	3.9	3.4	3.8	3.6	3.6			
23.0	3.8	2.9	3.3	3.6	3.6	3.0	3.5	3.2	3.3			
24.0	3.5	2.7	3.0	3.2	3.3	2.8	3.2	3.0	3.0			
25.0	3.3	2.4	2.7	3.0	3.1	2.6	2.9	2.7	2.8			
26.0	3.0	2.1	2.5	2.8	2.8	2.3	2.7	2.5	2.5			
27.0	2.8	1.9	2.3	2.5	2.6	2.1	2.5	2.3	2.3			
28.0	2.6	1.7	2.1	2.4	2.4	1.8	2.3	2.1	2.1			
29.0	2.4	1.5	1.9	2.2	2.2	1.7	2.1	1.8	1.9			
30.0	2.2	1.4	1.7	2.0	2.1	1.6	1.9	1.7	1.7			
31.0	2.1	1.2	1.6	1.8	1.9	1.4	1.8	1.6	1.6			
32.0	1.9	1.1	1.4	1.6	1.8	1.2	1.6	1.4	1.4			
33.0		0.9	1.3	1.5	1.6	1.1	1.5	1.3	1.3			
34.0		0.8	1.2	1.4	1.5	1.0	1.4	1.2	1.2			
35.0		0.7	1.0	1.3	1.4	0.8	1.2	1.0	1.0			
36.0						0.7	1.1	0.9	0.9			
37.0							1.0	0.8	0.8			
38.0							0.9	0.7	0.7			
39.0							0.8					
40.0												
n	4	4	4	4	4	3	3	3	3			
% 2#	0	92	46	46	0	92	46	92	100			
% 3#	46	92	92	46	92	92	92	92	100			
% 4#	92	92	92	92	92	92	92	92	100			
% 5#	92	46	92	92	92	92	92	92	100			
% 6#	92	46	46	92	92	46	92	92	100			
m/s	11.1	11.1	11.1	11.1	11.1	11.1	11.1	11.1	11.1			

T

T unit：t

360° 100% 10 t

m \ m	10.7	14.4	14.3	14.2	18.0	17.9	17.8	17.7	21.7	21.4	21.2	25.3
3.0	45.0											
3.5	45.0	41.7	36.5	21.4								
4.0	42.5	38.7	36.0	20.8	37.7	34.2	26.0	15.0				
4.5	40.5	36.1	34.5	20.0	35.0	32.3	24.0	14.2	34.0	30.0	16.0	
5.0	35.0	33.9	32.0	19.2	33.0	30.0	22.7	13.2	32.0	28.4	15.5	
6.0	25.2	25.1	24.5	18.0	25.6	26.6	20.0	12.0	25.3	25.5	13.8	25.9
7.0	19.4	19.3	20.1	16.2	19.8	20.4	19.1	10.8	19.5	21.0	11.9	20.0
8.0		15.5	16.2	14.4	15.9	16.5	17.0	9.5	15.6	17.1	10.5	16.1
9.0		12.7	13.4	12.8	13.1	13.7	14.1	8.2	12.9	14.3	9.2	13.3
10.0		10.6	11.3	11.0	11.1	11.6	12.0	7.0	10.8	12.2	8.2	11.2
11.0		8.9	9.2	9.9	9.3	9.9	10.3	6.5	9.1	10.4	7.5	9.5
12.0					7.9	8.5	8.9	6.0	7.6	9.0	6.8	8.1
13.0					6.8	7.3	7.8	5.5	6.6	7.8	6.1	7.0
14.0					5.9	6.4	6.8	5.0	5.7	7.0	5.6	6.1
15.0									4.9	6.1	5.0	5.4
16.0									4.3	5.5	4.8	4.7
17.0									3.7	4.9	4.5	4.2
18.0									3.2	4.4	4.0	3.7
19.0												3.2
20.0												2.8
21.0												2.5
22.0												
23.0												
24.0												
25.0												
26.0												
27.0												
28.0												
29.0												
30.0												
31.0												
32.0												
33.0												
34.0												
n	11	10	10	10	9	9	9	9	8	8	8	7
% 2#	0	0	0	0	0	0	0	0	46	0	0	46
% 3#	0	46	0	0	46	0	0	0	46	0	0	46
% 4#	0	0	0	0	46	46	0	0	46	46	0	46
% 5#	0	0	46	0	0	46	46	0	0	46	46	46
% 6#	0	0	0	46	0	0	46	92	0	46	92	0
m/s	14.3	14.3	14.3	14.3	14.3	14.3	14.3	14.3	12.8	12.8	12.8	12.8

T

T unit：t

360° 100% 10 t

m / m	25.1	24.9	24.8	28.8	28.6	28.5	32.4	32.2	32.1	32.1	36.1	35.8
6.0	25.5	16.7	13.0	24.0	17.8	16.0	19.5	18.0	17.0	13.6		
7.0	20.8	15.6	12.0	20.5	16.5	14.5	18.2	16.8	15.5	12.5	15.9	15.5
8.0	16.9	14.2	11.0	16.6	15.5	12.5	16.2	15.9	14.3	11.0	15.5	15.0
9.0	14.1	12.5	10.0	13.8	14.4	11.5	13.4	14.1	13.3	10.0	13.4	14.0
10.0	12.0	11.2	9.0	11.7	12.3	10.0	11.3	12.0	12.5	9.0	11.4	12.2
11.0	10.3	10.0	8.2	9.9	10.6	9.0	9.6	10.3	10.8	8.2	9.6	10.5
12.0	8.9	8.5	7.5	8.6	9.2	8.2	8.2	8.9	9.4	7.6	8.2	9.1
13.0	7.7	7.6	6.8	7.4	8.1	7.6	7.1	7.7	8.2	7.2	7.1	7.9
14.0	6.8	7.3	5.8	6.5	7.1	7.0	6.2	6.8	7.3	6.8	6.2	7.0
15.0	6.0	6.5	5.3	5.7	6.4	6.0	5.4	6.1	6.5	6.2	5.4	6.2
16.0	5.4	5.9	5.0	5.1	5.7	5.5	4.8	5.4	5.9	5.7	4.8	5.6
17.0	4.8	5.3	4.5	4.6	5.1	5.4	4.2	4.9	5.3	5.3	4.2	5.0
18.0	4.3	4.7	4.2	4.1	4.6	4.9	3.8	4.3	4.8	4.8	3.7	4.5
19.0	3.9	4.3	4.0	3.6	4.2	4.5	3.3	3.9	4.3	4.4	3.3	4.1
20.0	3.5	3.9	3.8	3.3	3.8	4.1	3.0	3.5	3.9	3.9	3.0	3.7
21.0	3.2	3.6	3.6	2.9	3.5	3.7	2.6	3.2	3.6	3.6	2.6	3.4
22.0				2.6	3.1	3.4	2.3	2.9	3.3	3.3	2.3	3.0
23.0				2.3	2.9	3.2	2.0	2.6	3.0	3.1	2.0	2.8
24.0				2.1	2.6	2.9	1.7	2.4	2.7	2.8	1.7	2.5
25.0				1.8	2.4	2.6	1.6	2.1	2.5	2.6	1.6	2.3
26.0							1.3	1.9	2.3	2.3	1.3	2.1
27.0							1.2	1.7	2.1	2.2	1.2	1.9
28.0							1.0	1.6	1.9	2.0	1.0	1.7
29.0											0.9	1.5
30.0											0.7	1.3
31.0												1.2
32.0												1.1
33.0												
34.0												
35.0												
n	7	7	7	6	6	6	5	5	5	5	4	4
% 2#	0	0	0	46	0	0	92	46	0	0	92	46
% 3#	46	0	0	46	46	0	46	46	46	0	92	46
% 4#	46	46	0	46	46	46	46	46	46	92	46	46
% 5#	46	46	92	46	46	92	46	46	92	92	46	92
% 6#	46	92	92	46	92	92	46	92	92	92	46	92
m/s	12.8	12.8	12.8	12.8	12.8	12.8	11.1	11.1	11.1	11.1	11.1	11.1

T

T unit：t

360° 100% 10 t

m \ m	35.7	39.7	39.6	39.4	39.4	43.3	43.1	46.8	50.0			
7.0	13.7											
8.0	12.8	12.7	12.5	11.8	10.7							
9.0	12.5	12.5	11.5	10.9	9.8	10.2	9.8	7.8				
10.0	12.0	11.5	10.6	10.1	9.0	10.0	9.5	7.8	6.4			
11.0	10.8	9.7	10.2	9.4	8.5	9.7	9.0	7.7	6.4			
12.0	9.4	8.3	8.8	9.1	8.3	8.5	8.7	7.5	6.4			
13.0	8.3	7.2	7.7	8.0	8.1	7.4	7.9	7.2	6.4			
14.0	7.3	6.3	6.7	7.0	7.1	6.5	7.0	6.7	6.2			
15.0	6.5	5.5	5.9	6.2	6.4	5.7	6.1	5.9	5.9			
16.0	5.8	4.9	5.3	5.6	5.7	5.0	5.5	5.3	5.3			
17.0	5.3	4.3	4.8	5.0	5.1	4.5	5.0	4.7	4.7			
18.0	4.8	3.9	4.3	4.5	4.6	4.0	4.5	4.2	4.2			
19.0	4.3	3.4	3.8	4.1	4.2	3.6	4.0	3.8	3.8			
20.0	3.9	3.1	3.4	3.7	3.8	3.2	3.7	3.4	3.4			
21.0	3.6	2.7	3.1	3.4	3.4	2.9	3.3	3.0	3.1			
22.0	3.3	2.4	2.8	3.0	3.1	2.6	3.0	2.7	2.7			
23.0	3.0	2.1	2.5	2.8	2.8	2.3	2.7	2.5	2.5			
24.0	2.7	1.9	2.3	2.5	2.6	2.0	2.5	2.3	2.3			
25.0	2.5	1.6	2.1	2.3	2.4	1.8	2.3	2.0	2.1			
26.0	2.3	1.5	1.8	2.1	2.2	1.6	2.0	1.8	1.8			
27.0	2.1	1.3	1.6	1.9	2.0	1.4	1.8	1.6	1.6			
28.0	1.9	1.1	1.4	1.7	1.7	1.2	1.6	1.4	1.4			
29.0	1.8	0.9	1.3	1.6	1.6	1.1	1.5	1.3	1.3			
30.0	1.6	0.8	1.1	1.4	1.5	1.0	1.3	1.1	1.1			
31.0	1.5	0.7	1.0	1.3	1.3	0.8	1.2	1.0	1.0			
32.0	1.4		0.9	1.2	1.2	0.7	1.1	0.9	0.9			
33.0			0.8	1.0	1.1		1.0	0.8	0.8			
34.0			0.7	0.9	1.0		0.8	0.7	0.7			
35.0				0.8	0.8		0.7					
n	4	4	4	4	4	3	3	3	3			
% 2#	0	92	46	46	0	92	46	92	100			
% 3#	46	92	92	46	92	92	92	92	100			
% 4#	92	92	92	92	92	92	92	92	100			
% 5#	92	46	92	92	92	92	92	92	100			
% 6#	92	46	46	92	92	46	92	92	100			
m/s	11.1	11.1	11.1	11.1	11.1	11.1	11.1	11.1	11.1			

T

T unit：t

360°	100%	6.5 t

m \ m	10.7	14.4	14.3	14.2	18.0	17.9	17.8	17.7	21.7	21.4	21.2	25.3
3.0	43.0											
3.5	43.0	41.7	36.0	21.4								
4.0	40.1	38.7	34.0	20.8	36.9	34.2	26.0	15.0				
4.5	37.3	36.0	32.2	20.0	34.5	32.3	24.0	14.2	32.8	29.3	16.0	
5.0	30.9	30.7	30.7	19.2	31.3	30.0	22.7	13.2	31.0	27.4	15.5	
6.0	22.2	22.0	22.9	18.0	22.5	23.2	20.0	12.0	22.2	23.9	13.8	22.8
7.0	17.0	16.9	17.7	16.2	17.3	18.0	18.5	10.8	17.0	18.6	11.9	17.5
8.0		13.4	14.2	14.4	13.8	14.4	14.9	9.5	13.6	15.0	10.5	14.0
9.0		10.7	11.5	11.7	11.1	11.7	12.3	8.2	10.9	12.4	9.2	11.3
10.0		8.7	9.5	9.7	9.2	9.7	10.2	7.0	8.9	10.3	8.2	9.4
11.0		7.2	8.5	8.2	7.6	8.2	8.6	6.5	7.3	8.8	7.5	7.8
12.0					6.5	6.9	7.5	6.0	6.2	7.5	6.8	6.6
13.0					5.5	6.0	6.5	5.5	5.3	6.5	6.1	5.6
14.0					4.7	5.2	5.6	5.0	4.5	5.7	5.6	4.9
15.0									3.8	5.0	5.0	4.2
16.0									3.3	4.4	4.8	3.6
17.0									2.8	3.9	4.3	3.2
18.0									2.4	3.6	3.8	2.8
19.0												2.4
20.0												2.0
21.0												1.8
22.0												
23.0												
24.0												
25.0												
26.0												
27.0												
28.0												
29.0												
30.0												
31.0												
32.0												
n	11	10	10	10	9	9	9	9	8	8	8	7
% 2#	0	0	0	0	0	0	0	0	46	0	0	46
% 3#	0	46	0	0	46	0	0	0	46	0	0	46
% 4#	0	0	0	0	46	46	0	0	46	46	0	46
% 5#	0	0	46	0	0	46	46	0	0	46	46	46
% 6#	0	0	0	46	0	0	46	92	0	46	92	0
m/s	14.3	14.3	14.3	14.3	14.3	14.3	14.3	14.3	12.8	12.8	12.8	12.8

T

T unit：t

360° 100% 6.5 t

m \ m	25.1	24.9	24.8	28.8	28.6	28.5	32.4	32.2	32.1	32.1	36.1	35.8
6.0	25.2	16.7	13.0	22.9	17.8	16.0	19.5	18.0	17.0	13.6		
7.0	19.5	15.6	12.0	18.1	16.5	14.5	17.6	16.8	15.5	12.5	15.0	15.5
8.0	15.8	14.2	11.0	14.5	15.3	12.5	14.2	14.9	14.3	11.0	14.2	15.0
9.0	12.9	12.5	10.0	11.8	12.6	11.5	11.5	12.3	12.8	10.0	11.5	12.4
10.0	10.8	10.7	9.0	9.8	10.5	10.0	9.4	10.2	10.7	9.0	9.4	10.4
11.0	9.1	9.2	8.2	8.3	9.0	9.0	7.9	8.6	9.2	8.2	7.9	8.8
12.0	7.7	7.9	7.5	7.1	7.7	8.1	6.7	7.4	7.8	7.6	6.7	7.5
13.0	7.0	6.9	6.8	6.1	6.7	7.1	5.7	6.4	6.9	7.0	5.8	6.6
14.0	6.2	6.1	5.8	5.3	5.9	6.2	5.0	5.6	6.1	6.2	5.0	5.8
15.0	5.4	5.4	5.3	4.6	5.2	5.5	4.3	5.0	5.4	5.5	4.3	5.1
16.0	4.5	4.8	4.9	4.1	4.6	5.0	3.7	4.3	4.8	4.8	3.8	4.5
17.0	4.1	4.3	4.3	3.6	4.2	4.5	3.2	3.9	4.3	4.4	3.2	4.0
18.0	3.6	3.8	4.0	3.1	3.7	4.0	2.8	3.4	3.8	3.9	2.8	3.6
19.0	3.3	3.5	3.5	2.8	3.4	3.6	2.5	3.1	3.5	3.5	2.5	3.2
20.0	2.8	3.2	3.2	2.5	3.0	3.3	2.2	2.7	3.2	3.2	2.1	2.9
21.0	2.5	2.8	2.9	2.2	2.7	3.0	1.8	2.4	2.8	2.9	1.8	2.6
22.0				1.9	2.4	2.7	1.6	2.2	2.6	2.6	1.5	2.3
23.0				1.6	2.2	2.5	1.4	1.9	2.3	2.4	1.4	2.1
24.0				1.5	2.0	2.2	1.2	1.7	2.1	2.2	1.2	1.8
25.0				1.2	1.7	2.1	1.0	1.5	1.9	2.0	1.0	1.7
26.0							0.8	1.3	1.7	1.8	0.8	1.4
27.0								1.2	1.5	1.6		1.3
28.0								1.0	1.4	1.5		1.1
29.0												1.0
30.0												0.9
31.0												0.8
32.0												0.7
C_n	7	7	7	6	6	6	5	5	5	5	4	4
% 2#	0	0	0	46	0	0	92	46	0	0	92	46
% 3#	46	0	0	46	46	0	46	46	46	0	92	46
% 4#	46	46	0	46	46	46	46	46	46	92	46	46
% 5#	46	46	92	46	46	92	46	46	92	92	46	92
% 6#	46	92	92	46	92	92	46	92	92	92	46	92
m/s	12.8	12.8	12.8	12.8	12.8	12.8	11.1	11.1	11.1	11.1	11.1	11.1

T

T unit：t

360° 100% 6.5 t

m \ m	35.7	39.7	39.6	39.4	39.4	43.3	43.1	46.8	50.0			
7.0	13.7											
8.0	12.8	12.7	12.5	11.8	10.7							
9.0	12.5	11.6	11.5	10.9	9.8	10.2	9.8	7.8				
10.0	10.7	9.6	10.1	10.1	9.0	9.8	9.5	7.8	6.3			
11.0	9.2	8.0	8.5	8.8	8.5	8.2	8.8	7.7	6.3			
12.0	7.9	6.9	7.3	7.6	7.7	7.0	7.5	7.2	6.3			
13.0	6.9	5.9	6.3	6.6	6.7	6.0	6.5	6.2	6.3			
14.0	6.1	5.1	5.5	5.8	5.9	5.3	5.7	5.5	5.5			
15.0	5.4	4.4	4.8	5.2	5.2	4.6	5.1	4.8	4.8			
16.0	4.8	3.8	4.3	4.5	4.7	4.1	4.5	4.2	4.3			
17.0	4.3	3.4	3.8	4.0	4.2	3.5	4.0	3.8	3.8			
18.0	3.9	3.0	3.3	3.6	3.7	3.1	3.5	3.3	3.3			
19.0	3.5	2.5	2.9	3.2	3.3	2.7	3.2	2.9	2.9			
20.0	3.2	2.2	2.6	2.9	3.0	2.4	2.8	2.6	2.6			
21.0	2.8	1.9	2.3	2.6	2.6	2.1	2.5	2.3	2.3			
22.0	2.6	1.6	2.1	2.4	2.4	1.8	2.3	2.0	2.1			
23.0	2.3	1.4	1.8	2.1	2.2	1.6	2.0	1.8	1.8			
24.0	2.1	1.3	1.6	1.8	2.0	1.4	1.8	1.6	1.6			
25.0	1.9	1.0	1.4	1.7	1.7	1.2	1.6	1.4	1.4			
26.0	1.7	0.9	1.2	1.5	1.6	1.0	1.4	1.2	1.2			
27.0	1.5	0.7	1.1	1.3	1.4	0.9	1.3	1.1	1.0			
28.0	1.4		0.9	1.2	1.2	0.7	1.1	0.9	0.9			
29.0	1.2		0.8	1.0	1.1		0.9	0.7	0.8			
30.0	1.1			0.9	1.0		0.9		0.7			
31.0	1.0			0.8	0.9		0.7					
32.0	0.9			0.7	0.7							
n	4	4	4	4	4	3	3	3	3			
% 2#	0	92	46	46	0	92	46	92	100			
% 3#	46	92	92	46	92	92	92	92	100			
% 4#	92	92	92	92	92	92	92	92	100			
% 5#	92	46	92	92	92	92	92	92	100			
% 6#	92	46	46	92	92	46	92	92	100			
m/s	11.1	11.1	11.1	11.1	11.1	11.1	11.1	11.1	11.1			

T

T unit：t

360° 100% 4.2 t

m / m	10.7	14.4	14.3	14.2	18.0	17.9	17.8	17.7	21.7	21.4	21.2	25.3
3.0	43.0											
3.5	43.0	41.7	36.0	21.4								
4.0	40.1	38.7	34.0	20.8	36.9	34.2	26.0	15.0				
4.5	33.0	32.9	32.2	20.0	33.6	32.3	24.0	14.2	31.5	29.3	16.0	
5.0	26.9	26.7	27.7	19.2	27.4	28.1	22.7	13.2	26.9	27.4	15.5	
6.0	19.2	19.1	20.0	18.0	19.6	20.3	20.0	12.0	19.3	20.9	13.8	19.8
7.0	14.3	14.3	15.1	15.5	14.8	15.5	16.1	10.8	14.5	16.2	11.9	15.0
8.0		10.9	11.7	12.0	11.4	12.0	12.5	9.5	11.0	12.7	10.5	11.6
9.0		8.6	9.4	9.6	9.0	9.6	10.1	8.2	8.7	10.2	9.2	9.2
10.0		6.9	7.6	7.9	7.3	7.9	8.4	7.0	7.0	8.5	8.2	7.5
11.0		5.6	6.2	6.6	6.1	6.6	7.0	6.5	5.8	7.2	7.5	6.2
12.0					5.0	5.5	6.0	6.0	4.8	6.1	6.5	5.2
13.0					4.2	4.7	5.2	5.5	3.9	5.2	5.6	4.4
14.0					3.5	4.0	4.5	4.8	3.3	4.5	4.9	3.7
15.0									2.7	4.0	4.3	3.1
16.0									2.2	3.4	3.8	2.7
17.0									1.8	3.0	3.4	2.3
18.0									1.5	2.7	3.0	1.9
19.0												1.6
20.0												1.3
21.0												1.1
22.0												
23.0												
24.0												
25.0												
26.0												
27.0												
28.0												
29.0												
30.0												
31.0												
C_n	11	10	10	10	9	9	9	9	8	8	8	7
% 2#	0	0	0	0	0	0	0	0	46	0	0	46
% 3#	0	46	0	0	46	0	0	0	46	0	0	46
% 4#	0	0	0	0	46	46	0	0	46	46	0	46
% 5#	0	0	46	0	0	46	46	0	0	46	46	46
% 6#	0	0	0	46	0	0	46	92	0	46	92	0
m/s	14.3	14.3	14.3	14.3	14.3	14.3	14.3	14.3	12.8	12.8	12.8	12.8

T

T unit：t

360° 100% 4.2 t

m	25.1	24.9	24.8	28.8	28.6	28.5	32.4	32.2	32.1	32.1	36.1	35.8
6.0	20.8	16.7	13.0	20.1	17.8	16.0	18.5	18.0	17.0	13.6		
7.0	16.0	15.6	12.0	15.6	16.5	14.5	15.2	16.1	15.5	12.5	14.6	14.0
8.0	12.5	13.2	11.0	12.1	13.0	12.5	11.7	12.5	13.1	11.0	11.6	12.7
9.0	10.1	10.7	10.0	9.7	10.5	10.8	9.4	10.1	10.6	10.0	9.3	10.3
10.0	8.3	8.9	8.9	7.9	8.7	9.1	7.6	8.4	8.9	8.9	7.6	8.6
11.0	6.9	7.5	7.5	6.7	7.3	7.6	6.3	7.0	7.5	7.6	6.3	7.2
12.0	5.9	6.4	6.6	5.7	6.3	6.7	5.3	6.0	6.5	6.5	5.3	6.2
13.0	5.1	5.6	5.7	4.8	5.4	5.8	4.5	5.1	5.6	5.6	4.5	5.3
14.0	4.4	4.9	5.0	4.1	4.8	5.1	3.8	4.5	4.9	5.0	3.8	4.6
15.0	3.8	4.3	4.4	3.5	4.1	4.5	3.3	3.8	4.3	4.4	3.2	4.0
16.0	3.4	3.8	4.0	3.1	3.7	4.0	2.7	3.4	3.8	3.9	2.8	3.5
17.0	2.9	3.4	3.6	2.6	3.2	3.5	2.4	3.0	3.4	3.4	2.3	3.1
18.0	2.5	3.0	3.2	2.3	2.9	3.1	2.0	2.5	3.0	3.0	1.9	2.7
19.0	2.2	2.7	2.8	2.0	2.5	2.8	1.7	2.3	2.7	2.7	1.6	2.4
20.0	1.9	2.4	2.5	1.7	2.2	2.5	1.4	1.9	2.4	2.4	1.3	2.1
21.0	1.6	2.1	2.2	1.4	2.0	2.2	1.1	1.7	2.1	2.2	1.1	1.8
22.0				1.2	1.7	2.0	0.9	1.5	1.9	1.9	0.9	1.6
23.0				1.0	1.5	1.8	0.7	1.2	1.6	1.7	0.7	1.4
24.0				0.8	1.3	1.6		1.1	1.5	1.5		1.2
25.0					1.1	1.4		0.9	1.3	1.4		1.1
26.0								0.8	1.2	1.2		0.9
27.0									1.0	1.0		0.8
28.0									0.9	0.9		
29.0												
30.0												
31.0												
n	7	7	7	6	6	6	5	5	5	5	4	4
% 2#	0	0	0	46	0	0	92	46	0	0	92	46
% 3#	46	0	0	46	46	0	46	46	46	0	92	46
% 4#	46	46	0	46	46	46	46	46	46	92	46	46
% 5#	46	46	92	46	46	92	46	46	92	92	46	92
% 6#	46	92	92	46	92	92	46	92	92	92	46	92
m/s	12.8	12.8	12.8	12.8	12.8	12.8	11.1	11.1	11.1	11.1	11.1	11.1

T

T unit：t

360° 100% 4.2 t

m \ m	35.7	39.7	39.6	39.4	39.4	43.3	43.1	46.8	50.0			
7.0	13.7											
8.0	12.8	11.8	11.6	11.5	10.7							
9.0	10.7	9.5	10.0	10.4	9.8	9.7	9.8	7.8				
10.0	8.9	7.7	8.2	8.6	8.7	7.9	8.5	7.8	6.3			
11.0	7.5	6.4	6.9	7.3	7.3	6.6	7.1	6.9	6.3			
12.0	6.4	5.4	5.9	6.1	6.3	5.6	6.1	5.8	5.8			
13.0	5.6	4.6	5.0	5.3	5.4	4.8	5.3	5.0	5.0			
14.0	4.9	3.9	4.4	4.6	4.7	4.1	4.5	4.3	4.3			
15.0	4.3	3.3	3.7	4.1	4.1	3.5	4.0	3.7	3.7			
16.0	3.8	2.8	3.2	3.6	3.6	3.0	3.5	3.2	3.3			
17.0	3.4	2.4	2.8	3.2	3.2	2.6	3.0	2.8	2.8			
18.0	3.0	2.1	2.5	2.7	2.8	2.2	2.6	2.4	2.5			
19.0	2.7	1.7	2.1	2.4	2.5	1.9	2.3	2.1	2.2			
20.0	2.4	1.4	1.9	2.1	2.2	1.6	2.1	1.8	1.8			
21.0	2.1	1.2	1.6	1.9	1.9	1.4	1.8	1.6	1.6			
22.0	1.9	1.0	1.4	1.6	1.7	1.2	1.5	1.3	1.4			
23.0	1.6	0.8	1.2	1.4	1.5	0.9	1.4	1.1	1.2			
24.0	1.5		1.0	1.3	1.3	0.8	1.2	1.0	1.0			
25.0	1.3		0.8	1.1	1.1		1.0	0.8	0.8			
26.0	1.2		0.7	0.9	1.0		0.8	0.7	0.7			
27.0	1.0			0.8	0.9		0.7					
28.0	0.9			0.7	0.7							
29.0	0.7											
30.0												
31.0												
n	4	4	4	4	4	3	3	3	3			
% 2#	0	92	46	46	0	92	46	92	100			
% 3#	46	92	92	46	92	92	92	92	100			
% 4#	92	92	92	92	92	92	92	92	100			
% 5#	92	46	92	92	92	92	92	92	100			
% 6#	92	46	46	92	92	46	92	92	100			
m/s	11.1	11.1	11.1	11.1	11.1	11.1	11.1	11.1	11.1			

T

T unit：t

360° 100% 3.9 t

m \ m	10.7	14.4	14.3	14.2	18.0	17.9	17.8	17.7	21.7	21.4	21.2	25.3
3.0	43.0											
3.5	40.0	41.7	35.0	20.5								
4.0	38.7	38.7	34.0	18.8	36.9	34.2	26.0	14.3				
4.5	32.5	32.4	32.2	17.6	33.0	32.3	24.0	13.2	31.0	28.4	16.0	
5.0	26.5	26.3	27.3	16.5	26.9	27.7	22.7	12.7	26.6	26.6	15.5	
6.0	18.9	18.8	19.6	14.8	19.3	20.0	20.0	11.2	19.0	20.6	13.8	19.5
7.0	14.0	13.9	14.8	13.5	14.5	15.2	15.8	10.0	14.2	15.9	11.9	14.7
8.0		10.6	11.4	11.8	11.1	11.8	12.3	9.2	10.8	12.4	10.5	11.3
9.0		8.3	9.2	9.4	8.8	9.4	9.9	8.0	8.5	10.0	9.2	9.0
10.0		6.7	7.5	7.7	7.2	7.6	8.2	7.0	6.8	8.3	8.2	7.3
11.0		5.5		6.4	5.9	6.4	6.9	6.5	5.6	7.0	7.3	6.0
12.0					4.9	5.4	5.8	5.9	4.6	5.9	6.3	5.0
13.0					4.1	4.6	5.0	5.0	3.8	5.1	5.5	4.2
14.0					3.4	3.9	4.3	4.4	3.2	4.4	4.8	3.5
15.0									2.6	3.8	4.2	3.0
16.0									2.2	3.4	3.7	2.5
17.0									1.8	2.9	3.2	2.1
18.0									1.4	2.5	2.9	1.7
19.0												1.5
20.0												1.2
21.0												1.0
22.0												
23.0												
24.0												
25.0												
26.0												
27.0												
28.0												
29.0												
30.0												
31.0												
n	11	10	10	10	9	9	9	9	8	8	8	7
% 2#	0	0	0	0	0	0	0	0	46	0	0	46
% 3#	0	46	0	0	46	0	0	0	46	0	0	46
% 4#	0	0	0	0	46	46	0	0	46	46	0	46
% 5#	0	0	46	0	0	46	46	0	0	46	46	46
% 6#	0	0	0	46	0	0	46	92	0	46	92	0
m/s	14.3	14.3	14.3	14.3	14.3	14.3	14.3	14.3	12.8	12.8	12.8	12.8

T

T unit：t

360° 100% 3.9 t

m / m	25.1	24.9	24.8	28.8	28.6	28.5	32.4	32.2	32.1	32.1	36.1	35.8
6.0	20.5	16.6	13.0	19.8	17.8	16.0	18.3	18.0	17.0	13.6		
7.0	15.8	15.2	12.0	15.3	16.2	14.5	14.9	15.8	15.5	12.5	14.4	14.0
8.0	12.2	12.9	11.0	11.9	12.7	12.5	11.5	12.3	12.8	11.0	11.5	12.5
9.0	9.9	10.5	10.0	9.5	10.3	10.6	9.1	9.9	10.4	10.0	9.1	10.1
10.0	8.1	8.7	8.8	7.8	8.5	8.9	7.5	8.2	8.7	8.8	7.4	8.4
11.0	6.8	7.4	7.4	6.5	7.1	7.5	6.2	6.9	7.3	7.4	6.2	7.1
12.0	5.8	6.3	6.4	5.5	6.1	6.5	5.2	5.8	6.3	6.3	5.1	6.0
13.0	5.0	5.4	5.6	4.7	5.3	5.6	4.3	5.0	5.5	5.5	4.3	5.1
14.0	4.3	4.8	4.9	4.0	4.6	4.9	3.7	4.3	4.8	4.8	3.6	4.5
15.0	3.7	4.2	4.2	3.5	4.0	4.3	3.1	3.8	4.2	4.2	3.1	3.9
16.0	3.2	3.7	3.8	2.9	3.5	3.8	2.7	3.2	3.6	3.7	2.6	3.4
17.0	2.8	3.2	3.4	2.5	3.1	3.4	2.2	2.8	3.2	3.4	2.3	3.0
18.0	2.5	2.9	3.0	2.2	2.7	3.0	1.8	2.5	2.9	2.9	1.8	2.6
19.0	2.1	2.6	2.7	1.8	2.5	2.7	1.5	2.2	2.5	2.7	1.6	2.3
20.0	1.9	2.3	2.4	1.6	2.2	2.4	1.3	1.9	2.3	2.3	1.3	2.0
21.0	1.6	2.0	2.1	1.3	1.8	2.2	1.1	1.6	2.0	2.1	1.0	1.8
22.0				1.1	1.7	1.9	0.8	1.4	1.8	1.9	0.8	1.5
23.0				0.9	1.4	1.8	0.7	1.2	1.6	1.6		1.4
24.0				0.7	1.3	1.5		1.0	1.4	1.5		1.2
25.0					1.1	1.4		0.9	1.2	1.3		1.0
26.0								0.7	1.1	1.2		0.8
27.0									1.0	1.0		0.7
28.0									0.8	0.9		
29.0												
30.0												
31.0												
C_n	7	7	7	6	6	6	5	5	5	5	4	4
% 2#	0	0	0	46	0	0	92	46	0	0	92	46
% 3#	46	0	0	46	46	0	46	46	46	0	92	46
% 4#	46	46	0	46	46	46	46	46	46	92	46	46
% 5#	46	46	92	46	46	92	46	46	92	92	46	92
% 6#	46	92	92	46	92	92	46	92	92	92	46	92
m/s	12.8	12.8	12.8	12.8	12.8	12.8	11.1	11.1	11.1	11.1	11.1	11.1

T

T unit：t

360°	100%	3.9 t

m / m	35.7	39.7	39.6	39.4	39.4	43.3	43.1	46.8	50.0			
7.0	13.7											
8.0	12.8	11.5	11.6	11.5	10.7							
9.0	10.4	9.3	9.8	10.2	9.8	9.4	9.8	7.8				
10.0	8.7	7.6	8.0	8.4	8.5	7.8	8.3	7.8	6.3			
11.0	7.4	6.2	6.7	7.0	7.1	6.4	7.0	6.7	6.3			
12.0	6.3	5.2	5.7	6.0	6.1	5.4	5.9	5.7	5.7			
13.0	5.5	4.4	4.9	5.2	5.3	4.6	5.1	4.9	4.9			
14.0	4.8	3.8	4.2	4.5	4.6	3.9	4.4	4.2	4.2			
15.0	4.2	3.2	3.6	3.9	4.0	3.4	3.9	3.6	3.7			
16.0	3.7	2.7	3.2	3.4	3.5	2.9	3.3	3.1	3.1			
17.0	3.3	2.3	2.8	3.0	3.1	2.5	2.9	2.7	2.7			
18.0	2.9	1.9	2.4	2.7	2.7	2.2	2.6	2.4	2.4			
19.0	2.5	1.6	2.1	2.3	2.4	1.8	2.3	2.0	2.0			
20.0	2.3	1.4	1.7	2.1	2.1	1.5	2.0	1.8	1.7			
21.0	2.0	1.2	1.6	1.8	1.9	1.3	1.7	1.5	1.5			
22.0	1.8	0.9	1.3	1.6	1.6	1.1	1.5	1.3	1.3			
23.0	1.6	0.7	1.1	1.4	1.4	0.9	1.3	1.1	1.1			
24.0	1.4		0.9	1.2	1.3	0.7	1.1	0.9	0.9			
25.0	1.2		0.8	1.0	1.1		0.9	0.7	0.8			
26.0	1.1			0.9	0.9		0.8					
27.0	1.0			0.7	0.8		0.7					
28.0	0.8				0.7							
29.0	0.7											
30.0												
31.0												
n	4	4	4	4	4	3	3	3	3			
% 2#	0	92	46	46	0	92	46	92	100			
% 3#	46	92	92	46	92	92	92	92	100			
% 4#	92	92	92	92	92	92	92	92	100			
% 5#	92	46	92	92	92	92	92	92	100			
% 6#	92	46	46	92	92	46	92	92	100			
m/s	11.1	11.1	11.1	11.1	11.1	11.1	11.1	11.1	11.1			

T

T unit：t

360° 50% 13 t

m \ m	10.7	14.4	14.3	14.2	18.0	17.9	17.8	17.7	21.7	21.4	21.2	25.3
3.0	51.1											
3.5	45.8	41.7	36.5	21.4								
4.0	41.5	38.7	36.0	20.8	37.7	34.8	26.0	15.0				
4.5	36.9	35.5	34.5	20.0	33.1	34.1	24.0	14.2	30.2	30.0	16.0	
5.0	30.1	30.0	31.0	19.2	28.8	29.7	22.7	13.2	26.4	28.4	15.5	
6.0	21.7	21.6	22.5	18.0	22.1	22.8	20.0	12.0	20.9	22.9	13.8	20.4
7.0	16.6	16.6	17.3	16.2	17.0	17.6	18.1	10.8	16.7	18.2	11.9	16.8
8.0		13.1	13.9	14.2	13.6	14.2	14.7	9.5	13.4	14.8	10.5	13.8
9.0		10.8	11.5	11.7	11.2	11.7	12.2	8.2	10.9	12.2	9.2	11.3
10.0		9.0	9.6	9.9	9.4	9.9	10.3	7.0	9.1	10.4	8.2	9.5
11.0		7.6		8.4	7.9	8.4	8.9	6.5	7.7	9.0	7.5	8.1
12.0					6.8	7.3	7.7	6.0	6.6	7.8	6.8	7.0
13.0					5.9	6.3	6.8	5.5	5.6	6.9	6.1	6.0
14.0					5.1	5.6	6.0	5.0	4.9	6.1	5.6	5.3
15.0									4.3	5.4	5.0	4.7
16.0									3.6	4.8	4.8	4.1
17.0									3.2	4.3	4.5	3.6
18.0									2.8	3.9	4.0	3.1
19.0												2.8
20.0												2.4
21.0												2.2
22.0												
23.0												
24.0												
25.0												
26.0												
27.0												
28.0												
29.0												
30.0												
31.0												
32.0												
33.0												
34.0												
C_n	11	10	10	10	9	9	9	9	8	8	8	7
% 2#	0	0	0	0	0	0	0	0	46	0	0	46
% 3#	0	46	0	0	46	0	0	0	46	0	0	46
% 4#	0	0	0	0	46	46	0	0	46	46	0	46
% 5#	0	0	46	0	0	46	46	0	0	46	46	46
% 6#	0	0	0	46	0	0	46	92	0	46	92	0
m/s	14.3	14.3	14.3	14.3	14.3	14.3	14.3	14.3	12.8	12.8	12.8	12.8

T

T unit：t

360° 50% 13 t

m	25.1	24.9	24.8	28.8	28.6	28.5	32.4	32.2	32.1	32.1	36.1	35.8
6.0	21.5	16.7	13.0	19.9	17.8	16.0	18.4	18.0	17.0	13.6		
7.0	17.9	15.6	12.0	16.6	16.5	14.5	15.4	16.3	15.5	12.5	14.7	15.5
8.0	14.6	14.2	11.0	14.1	14.9	12.5	13.1	14.0	14.3	11.0	12.6	13.6
9.0	12.1	12.5	10.0	11.8	12.5	11.5	11.3	12.1	12.6	10.0	10.8	11.9
10.0	10.3	10.8	9.0	10.0	10.6	10.0	9.6	10.3	10.8	9.0	9.5	10.5
11.0	8.8	9.4	8.2	8.5	9.2	9.0	8.2	8.9	9.3	8.2	8.2	9.0
12.0	7.7	8.2	7.5	7.4	8.0	8.2	7.1	7.7	8.1	7.6	7.0	7.8
13.0	6.7	7.2	6.8	6.5	7.0	7.3	6.2	6.7	7.2	7.2	6.2	6.9
14.0	6.0	6.4	6.2	5.6	6.2	6.6	5.4	6.0	6.4	6.4	5.4	6.1
15.0	5.3	5.7	5.6	5.0	5.6	5.8	4.7	5.3	5.7	5.8	4.7	5.5
16.0	4.7	5.2	5.2	4.5	5.0	5.3	4.1	4.7	5.2	5.2	4.1	4.9
17.0	4.2	4.7	4.7	3.9	4.5	4.8	3.7	4.3	4.7	4.7	3.6	4.4
18.0	3.7	4.2	4.3	3.5	4.1	4.4	3.2	3.8	4.2	4.3	3.3	3.9
19.0	3.4	3.9	3.9	3.2	3.6	4.0	2.8	3.4	3.9	3.9	2.9	3.6
20.0	3.1	3.4	3.5	2.8	3.3	3.6	2.5	3.1	3.4	3.5	2.5	3.2
21.0	2.8	3.2	3.2	2.5	3.0	3.3	2.3	2.8	3.1	3.2	2.3	2.9
22.0				2.2	2.8	3.0	2.0	2.5	2.9	2.9	1.9	2.7
23.0				2.0	2.5	2.8	1.7	2.2	2.6	2.7	1.7	2.4
24.0				1.8	2.3	2.6	1.5	2.0	2.4	2.5	1.5	2.2
25.0				1.6	2.1	2.4	1.3	1.8	2.2	2.3	1.3	1.9
26.0							1.1	1.6	2.0	2.1	1.1	1.7
27.0							1.0	1.5	1.8	1.9	1.0	1.6
28.0							0.8	1.3	1.6	1.7	0.8	1.4
29.0												1.3
30.0												1.2
31.0												1.0
32.0												0.9
33.0												
34.0												
35.0												
n	7	7	7	6	6	6	5	5	5	5	4	4
% 2#	0	0	0	46	0	0	92	46	0	0	92	46
% 3#	46	0	0	46	46	0	46	46	46	0	92	46
% 4#	46	46	0	46	46	46	46	46	46	92	46	46
% 5#	46	46	92	46	46	92	46	46	92	92	46	92
% 6#	46	92	92	46	92	92	46	92	92	92	46	92
m/s	12.8	12.8	12.8	12.8	12.8	12.8	11.1	11.1	11.1	11.1	11.1	11.1

T

T unit：t

360° 50% 13 t

m / m	35.7	39.7	39.6	39.4	39.4	43.3	43.1	46.8	50.0			
7.0	13.7											
8.0	12.8	12.2	12.5	11.8	10.7							
9.0	12.3	10.6	11.1	10.9	9.8	10.2	9.8	7.8				
10.0	10.8	9.3	9.8	10.1	9.0	9.2	9.5	7.8	6.4			
11.0	9.3	8.2	8.7	9.1	8.5	8.1	8.7	7.7	6.4			
12.0	8.2	7.2	7.6	7.8	7.9	7.2	7.8	7.3	6.4			
13.0	7.2	6.2	6.6	7.0	7.0	6.4	6.9	6.5	6.4			
14.0	6.4	5.4	5.9	6.2	6.2	5.6	6.1	5.8	5.8			
15.0	5.7	4.8	5.2	5.5	5.6	5.0	5.4	5.2	5.2			
16.0	5.2	4.3	4.7	4.9	5.0	4.4	4.9	4.6	4.6			
17.0	4.7	3.7	4.2	4.4	4.5	3.9	4.3	4.1	4.2			
18.0	4.2	3.3	3.7	3.9	4.1	3.5	3.9	3.7	3.7			
19.0	3.9	2.9	3.3	3.6	3.7	3.1	3.5	3.3	3.3			
20.0	3.5	2.6	3.0	3.2	3.3	2.8	3.2	3.0	3.0			
21.0	3.1	2.3	2.7	3.0	3.0	2.5	2.9	2.7	2.7			
22.0	2.9	2.0	2.4	2.7	2.7	2.2	2.6	2.4	2.4			
23.0	2.6	1.8	2.2	2.4	2.5	1.9	2.4	2.2	2.2			
24.0	2.4	1.6	1.9	2.2	2.3	1.7	2.1	2.0	1.9			
25.0	2.2	1.4	1.7	1.9	2.1	1.6	2.0	1.7	1.7			
26.0	2.1	1.2	1.5	1.8	1.8	1.3	1.7	1.5	1.6			
27.0	1.9	1.0	1.4	1.6	1.7	1.2	1.5	1.4	1.4			
28.0	1.6	0.9	1.2	1.5	1.5	1.0	1.4	1.2	1.2			
29.0	1.5	0.7	1.1	1.3	1.4	0.9	1.3	1.1	1.1			
30.0	1.4		0.9	1.2	1.3	0.7	1.1	0.9	0.9			
31.0	1.3		0.8	1.1	1.1		1.0	0.8	0.8			
32.0	1.2		0.7	0.9	1.0		0.9	0.7	0.7			
33.0				0.8	0.9		0.8					
34.0				0.8	0.8		0.7					
35.0					0.7							
n	4	4	4	4	4	3	3	3	3			
% 2#	0	92	46	46	0	92	46	92	100			
% 3#	46	92	92	46	92	92	92	92	100			
% 4#	92	92	92	92	92	92	92	92	100			
% 5#	92	46	92	92	92	92	92	92	100			
% 6#	92	46	46	92	92	46	92	92	100			
m/s	11.1	11.1	11.1	11.1	11.1	11.1	11.1	11.1	11.1			

T

T unit：t

360° 50% 10 t

m \ m	10.7	14.4	14.3	14.2	18.0	17.9	17.8	17.7	21.7	21.4	21.2	25.3
3.0	45.0											
3.5	45.0	41.7	36.5	21.4								
4.0	40.0	36.1	36.0	20.8	33.3	34.2	26.0	15.0				
4.5	31.2	30.4	31.6	20.0	28.4	29.3	24.0	14.2	25.8	28.0	16.0	
5.0	25.4	25.3	26.2	19.2	24.7	25.5	22.7	13.2	22.5	24.6	15.5	
6.0	18.1	18.1	18.9	18.0	18.6	19.3	19.8	12.0	17.7	19.6	13.8	18.7
7.0	13.8	13.7	14.5	14.8	14.2	14.8	15.2	10.8	13.9	15.4	11.9	15.3
8.0		10.8	11.5	11.8	11.3	11.8	12.3	9.5	11.0	12.4	10.5	11.5
9.0		8.8	9.4	9.7	9.2	9.7	10.1	8.2	8.9	10.2	9.2	9.3
10.0		7.1	7.8	8.1	7.5	8.1	8.6	7.0	7.3	8.7	8.2	7.8
11.0		6.0		6.8	6.4	6.8	7.3	6.5	6.1	7.4	7.5	6.6
12.0					5.4	5.9	6.3	6.0	5.2	6.4	6.7	5.6
13.0					4.6	5.1	5.5	5.5	4.4	5.6	5.9	4.8
14.0					3.9	4.4	4.8	4.8	3.7	4.9	5.2	4.1
15.0									3.2	4.3	4.7	3.5
16.0									2.7	3.8	4.2	3.0
17.0									2.3	3.4	3.7	2.7
18.0									1.9	3.0	3.3	2.3
19.0												1.9
20.0												1.7
21.0												1.4
22.0												
23.0												
24.0												
25.0												
26.0												
27.0												
28.0												
29.0												
30.0												
31.0												
32.0												
n	11	10	10	10	9	9	9	9	8	8	8	7
% 2#	0	0	0	0	0	0	0	0	46	0	0	46
% 3#	0	46	0	0	46	0	0	0	46	0	0	46
% 4#	0	0	0	0	46	46	0	0	46	46	0	46
% 5#	0	0	46	0	0	46	46	0	0	46	46	46
% 6#	0	0	0	46	0	0	46	92	0	46	92	0
m/s	14.3	14.3	14.3	14.3	14.3	14.3	14.3	14.3	12.8	12.8	12.8	12.8

T

T unit：t

360° 50% 10 t

m \ m	25.1	24.9	24.8	28.8	28.6	28.5	32.4	32.2	32.1	32.1	36.1	35.8
6.0	18.3	16.7	13.0	16.9	17.8	16.0	15.6	16.6	17.0	13.6		
7.0	15.2	15.6	12.0	14.1	14.9	14.5	13.0	13.9	14.5	12.5	12.4	13.5
8.0	12.2	12.8	11.0	11.9	12.7	12.5	11.0	11.8	12.4	11.0	10.5	11.6
9.0	10.1	10.6	10.0	9.8	10.5	10.8	9.4	10.2	10.7	10.0	9.0	10.0
10.0	8.5	9.1	9.0	8.2	8.9	9.2	7.8	8.5	9.0	9.0	7.8	8.8
11.0	7.2	7.8	7.8	6.9	7.6	7.9	6.7	7.3	7.7	7.8	6.6	7.4
12.0	6.2	6.7	6.8	5.9	6.6	6.9	5.7	6.3	6.7	6.8	5.7	6.4
13.0	5.5	5.9	5.9	5.2	5.7	6.0	4.9	5.5	5.9	6.0	4.9	5.7
14.0	4.7	5.2	5.3	4.5	5.1	5.4	4.2	4.8	5.2	5.3	4.2	5.0
15.0	4.2	4.7	4.7	3.9	4.5	4.8	3.6	4.2	4.7	4.7	3.6	4.4
16.0	3.7	4.2	4.2	3.4	3.9	4.3	3.2	3.8	4.1	4.2	3.1	3.9
17.0	3.3	3.7	3.7	3.0	3.5	3.9	2.7	3.3	3.7	3.8	2.7	3.4
18.0	2.9	3.3	3.4	2.6	3.2	3.5	2.4	2.9	3.3	3.3	2.4	3.0
19.0	2.5	3.0	3.0	2.3	2.9	3.1	2.0	2.6	3.0	3.0	2.0	2.8
20.0	2.3	2.7	2.8	2.0	2.6	2.8	1.7	2.3	2.7	2.7	1.7	2.4
21.0	2.0	2.5	2.5	1.7	2.3	2.6	1.5	2.1	2.4	2.5	1.5	2.2
22.0				1.5	2.1	2.3	1.2	1.8	2.2	2.3	1.2	2.0
23.0				1.3	1.9	2.1	1.1	1.6	2.0	2.0	1.1	1.8
24.0				1.1	1.7	1.9	0.9	1.4	1.8	1.8	0.9	1.5
25.0				1.0	1.4	1.7	0.7	1.2	1.6	1.7	0.7	1.3
26.0								1.0	1.4	1.5		1.2
27.0								0.9	1.3	1.3		1.1
28.0								0.8	1.1	1.2		0.9
29.0												0.8
30.0												0.7
31.0												
32.0												
C_n	7	7	7	6	6	6	5	5	5	5	4	4
% 2#	0	0	0	46	0	0	92	46	0	0	92	46
% 3#	46	0	0	46	46	0	46	46	46	0	92	46
% 4#	46	46	0	46	46	46	46	46	46	92	46	46
% 5#	46	46	92	46	46	92	46	46	92	92	46	92
% 6#	46	92	92	46	92	92	46	92	92	92	46	92
m/s	12.8	12.8	12.8	12.8	12.8	12.8	11.1	11.1	11.1	11.1	11.1	11.1

T

T unit：t

360° 50% 10 t

m / m	35.7	39.7	39.6	39.4	39.4	43.3	43.1	46.8	50.0			
7.0	13.7											
8.0	11.9	10.2	10.7	11.2	10.7							
9.0	10.4	8.8	9.3	9.7	9.8	8.7	9.3	7.8				
10.0	9.1	7.6	8.1	8.5	8.6	7.6	8.1	7.6	6.4			
11.0	7.7	6.7	7.2	7.5	7.6	6.6	7.2	6.7	6.4			
12.0	6.7	5.7	6.1	6.5	6.6	5.9	6.4	5.9	5.8			
13.0	5.9	4.9	5.3	5.7	5.8	5.2	5.6	5.3	5.2			
14.0	5.3	4.3	4.7	5.0	5.0	4.5	4.9	4.7	4.7			
15.0	4.6	3.7	4.1	4.4	4.5	3.8	4.3	4.1	4.1			
16.0	4.2	3.3	3.6	3.9	4.0	3.4	3.8	3.6	3.7			
17.0	3.7	2.8	3.2	3.4	3.5	3.0	3.4	3.2	3.2			
18.0	3.3	2.4	2.8	3.1	3.2	2.6	3.0	2.8	2.8			
19.0	3.0	2.1	2.5	2.8	2.8	2.3	2.7	2.5	2.5			
20.0	2.7	1.8	2.2	2.5	2.5	2.0	2.4	2.2	2.2			
21.0	2.4	1.6	2.0	2.2	2.3	1.7	2.1	1.9	2.0			
22.0	2.2	1.3	1.7	1.9	2.0	1.5	1.9	1.7	1.7			
23.0	2.0	1.1	1.5	1.8	1.8	1.3	1.7	1.4	1.5			
24.0	1.8	0.9	1.3	1.6	1.6	1.1	1.5	1.3	1.3			
25.0	1.6	0.8	1.1	1.4	1.4	0.9	1.3	1.1	1.1			
26.0	1.4		1.0	1.2	1.3	0.8	1.2	0.9	1.0			
27.0	1.3		0.8	1.1	1.1		1.0	0.8	0.8			
28.0	1.1		0.7	0.9	1.0		0.9	0.7	0.7			
29.0	1.0			0.8	0.9		0.8					
30.0	0.9			0.7	0.8							
31.0	0.8											
32.0	0.7											
n	4	4	4	4	4	3	3	3	3			
% 2#	0	92	46	46	0	92	46	92	100			
% 3#	46	92	92	46	92	92	92	92	100			
% 4#	92	92	92	92	92	92	92	92	100			
% 5#	92	46	92	92	92	92	92	92	100			
% 6#	92	46	46	92	92	46	92	92	100			
m/s	11.1	11.1	11.1	11.1	11.1	11.1	11.1	11.1	11.1			

T

T unit：t

360° 50% 6.5 t

m / m	10.7	14.4	14.3	14.2	18.0	17.9	17.8	17.7	21.7	21.4	21.2	25.3
3.0	43.0											
3.5	43.0	37.9	36.0	21.4								
4.0	33.9	31.0	32.3	20.8	28.6	29.6	26.0	15.0				
4.5	26.4	26.0	27.3	20.0	24.4	25.3	24.0	14.2	22.0	24.2	16.0	
5.0	21.4	21.3	22.2	19.2	21.1	21.9	22.7	13.2	19.1	21.2	15.5	
6.0	15.1	15.0	15.8	16.2	15.5	16.2	16.8	12.0	15.0	16.9	13.8	16.0
7.0	11.4	11.3	12.1	12.4	11.7	12.4	12.9	10.8	11.5	13.0	11.9	13.0
8.0		8.8	9.5	9.8	9.2	9.8	10.3	9.5	9.0	10.3	10.5	9.4
9.0		7.0	7.7	7.9	7.4	7.9	8.4	8.2	7.2	8.5	8.9	7.6
10.0		5.6	6.4	6.6	6.0	6.6	7.0	7.0	5.8	7.2	7.5	6.3
11.0		4.7		5.5	5.1	5.5	6.0	6.0	4.8	6.0	6.4	5.2
12.0					4.2	4.7	5.1	5.1	3.9	5.2	5.5	4.4
13.0					3.5	4.0	4.4	4.4	3.3	4.5	4.8	3.6
14.0					2.9	3.4	3.8	3.8	2.7	3.9	4.2	3.1
15.0									2.2	3.4	3.7	2.6
16.0									1.8	2.9	3.3	2.2
17.0									1.4	2.6	2.9	1.8
18.0									1.1	2.3	2.6	1.5
19.0												1.2
20.0												1.0
21.0												0.8
22.0												
23.0												
24.0												
25.0												
26.0												
27.0												
28.0												
29.0												
n	11	10	10	10	9	9	9	9	8	8	8	7
% 2#	0	0	0	0	0	0	0	0	46	0	0	46
% 3#	0	46	0	0	46	0	0	0	46	0	0	46
% 4#	0	0	0	0	46	46	0	0	46	46	0	46
% 5#	0	0	46	0	0	46	46	0	0	46	46	46
% 6#	0	0	0	46	0	0	46	92	0	46	92	0
m/s	14.3	14.3	14.3	14.3	14.3	14.3	14.3	14.3	12.8	12.8	12.8	12.8

T

T unit：t

360°	50%	6.5 t

m / m	25.1	24.9	24.8	28.8	28.6	28.5	32.4	32.2	32.1	32.1	36.1	35.8
6.0	15.7	16.5	13.0	14.4	15.4	15.8	13.2	14.1	14.8	13.6		
7.0	12.8	13.4	12.0	11.9	12.8	13.2	10.9	11.8	12.4	12.5	10.3	11.5
8.0	10.2	10.8	10.9	9.9	10.6	11.0	9.1	10.0	10.6	10.7	8.7	9.8
9.0	8.4	8.9	9.0	8.0	8.7	9.1	7.7	8.4	8.9	9.0	7.4	8.4
10.0	7.0	7.5	7.6	6.7	7.3	7.7	6.3	7.0	7.5	7.6	6.3	7.3
11.0	5.9	6.4	6.4	5.6	6.3	6.5	5.3	6.0	6.4	6.4	5.3	6.1
12.0	5.1	5.6	5.6	4.8	5.4	5.6	4.4	5.1	5.5	5.6	4.5	5.2
13.0	4.4	4.8	4.9	4.1	4.7	5.0	3.7	4.4	4.8	4.9	3.7	4.5
14.0	3.7	4.2	4.3	3.5	4.1	4.4	3.1	3.7	4.2	4.3	3.2	4.0
15.0	3.3	3.7	3.7	3.0	3.6	3.8	2.7	3.2	3.7	3.7	2.7	3.5
16.0	2.8	3.3	3.3	2.6	3.1	3.4	2.3	2.9	3.3	3.4	2.3	3.0
17.0	2.5	2.9	3.0	2.2	2.8	3.0	1.9	2.5	2.9	3.0	1.9	2.6
18.0	2.1	2.6	2.7	1.9	2.4	2.7	1.6	2.2	2.6	2.6	1.6	2.3
19.0	1.9	2.3	2.3	1.6	2.1	2.4	1.3	1.9	2.3	2.3	1.3	2.1
20.0	1.6	2.0	2.1	1.4	1.9	2.1	1.1	1.6	2.0	2.1	1.1	1.8
21.0	1.4	1.8	1.8	1.1	1.7	1.9	0.9	1.4	1.8	1.8	0.8	1.5
22.0				0.9	1.5	1.7	0.7	1.2	1.6	1.6	0.7	1.4
23.0				0.8	1.3	1.5		1.0	1.4	1.5		1.2
24.0					1.1	1.4		0.9	1.2	1.3		1.0
25.0					0.9	1.2		0.7	1.1	1.1		0.9
26.0									1.0	1.0		0.7
27.0									0.8	0.9		
28.0									0.7	0.8		
29.0												
n	7	7	7	6	6	6	5	5	5	5	4	4
% 2#	0	0	0	46	0	0	92	46	0	0	92	46
% 3#	46	0	0	46	46	0	46	46	46	0	92	46
% 4#	46	46	0	46	46	46	46	46	46	92	46	46
% 5#	46	46	92	46	46	92	46	46	92	92	46	92
% 6#	46	92	92	46	92	92	46	92	92	92	46	92
m/s	12.8	12.8	12.8	12.8	12.8	12.8	11.1	11.1	11.1	11.1	11.1	11.1

T

T unit：t 360° 50% 6.5 t

m / m	35.7	39.7	39.6	39.4	39.4	43.3	43.1	46.8	50.0			
7.0	11.9											
8.0	10.2	8.5	9.0	9.4	9.5							
9.0	8.8	7.2	7.8	8.2	8.2	7.1	7.7	7.2				
10.0	7.7	6.2	6.7	7.1	7.2	6.2	6.8	6.2	6.1			
11.0	6.4	5.4	5.9	6.3	6.2	5.4	5.9	5.4	5.3			
12.0	5.5	4.6	5.0	5.3	5.4	4.7	5.2	4.8	4.7			
13.0	4.8	3.9	4.3	4.6	4.7	4.0	4.5	4.2	4.1			
14.0	4.2	3.3	3.7	4.0	4.1	3.5	3.9	3.7	3.6			
15.0	3.7	2.8	3.2	3.5	3.5	3.0	3.4	3.2	3.2			
16.0	3.3	2.4	2.7	3.0	3.1	2.5	3.0	2.7	2.7			
17.0	2.9	2.0	2.4	2.6	2.7	2.2	2.6	2.3	2.4			
18.0	2.5	1.7	2.1	2.4	2.4	1.8	2.3	2.1	2.1			
19.0	2.3	1.4	1.8	2.1	2.1	1.6	1.9	1.7	1.8			
20.0	2.0	1.1	1.5	1.8	1.8	1.3	1.7	1.5	1.6			
21.0	1.8	1.0	1.3	1.6	1.6	1.1	1.5	1.3	1.3			
22.0	1.6	0.8	1.1	1.3	1.5	0.9	1.3	1.1	1.1			
23.0	1.4		0.9	1.2	1.2	0.7	1.1	0.9	0.9			
24.0	1.2		0.8	1.0	1.1		0.9	0.7	0.8			
25.0	1.1			0.9	0.9		0.8					
26.0	1.0			0.7	0.8		0.7					
27.0	0.8											
28.0	0.7											
29.0												
n	4	4	4	4	4	3	3	3	3			
% 2#	0	92	46	46	0	92	46	92	100			
% 3#	46	92	92	46	92	92	92	92	100			
% 4#	92	92	92	92	92	92	92	92	100			
% 5#	92	46	92	92	92	92	92	92	100			
% 6#	92	46	46	92	92	46	92	92	100			
m/s	11.1	11.1	11.1	11.1	11.1	11.1	11.1	11.1	11.1			

T

T unit：t

360°	50%	4.2 t

m \ m	10.7	14.4	14.3	14.2	18.0	17.9	17.8	17.7	21.7	21.4	21.2	25.3
3.0	43.0											
3.5	37.1	32.0	33.5	21.4								
4.0	28.0	26.1	27.4	20.8	24.1	25.1	26.0	15.0				
4.5	21.7	21.5	22.6	20.0	20.4	21.4	22.2	14.2	18.4	20.6	16.0	
5.0	17.4	17.3	18.3	18.7	17.6	18.5	19.3	13.2	15.9	18.0	15.5	
6.0	12.2	12.1	12.9	13.2	12.6	13.3	13.8	12.0	12.2	13.9	13.8	13.3
7.0	9.0	8.9	9.7	10.0	9.4	10.0	10.5	10.6	9.1	10.6	11.1	9.6
8.0		6.8	7.5	7.8	7.3	7.8	8.3	8.4	7.0	8.4	8.8	7.4
9.0		5.4	6.0	6.3	5.8	6.3	6.8	6.8	5.5	6.8	7.2	5.9
10.0		4.2	4.9	5.1	4.6	5.1	5.6	5.6	4.4	5.6	6.0	4.8
11.0		3.3		4.2	3.7	4.2	4.6	4.7	3.5	4.7	5.1	3.9
12.0					3.0	3.5	3.9	3.9	2.8	4.0	4.4	3.2
13.0					2.4	2.9	3.3	3.3	2.2	3.4	3.7	2.6
14.0					1.9	2.4	2.8	2.9	1.7	2.9	3.3	2.1
15.0									1.3	2.5	2.8	1.7
16.0									1.0	2.1	2.5	1.4
17.0									0.7	1.8	2.1	1.0
18.0										1.5	1.8	0.8
19.0												
20.0												
21.0												
22.0												
23.0												
24.0												
25.0												
n	11	10	10	10	9	9	9	9	8	8	8	7
% 2#	0	0	0	0	0	0	0	0	46	0	0	46
% 3#	0	46	0	0	46	0	0	0	46	0	0	46
% 4#	0	0	0	0	46	46	0	0	46	46	0	46
% 5#	0	0	46	0	0	46	46	0	0	46	46	46
% 6#	0	0	0	46	0	0	46	92	0	46	92	0
m/s	14.3	14.3	14.3	14.3	14.3	14.3	14.3	14.3	12.8	12.8	12.8	12.8

T

T unit：t

360° 50% 4.2 t

m \ m	25.1	24.9	24.8	28.8	28.6	28.5	32.4	32.2	32.1	32.1	36.1	35.8
6.0	13.2	13.9	13.0	12.0	12.9	13.4	10.9	11.8	12.5	12.6		
7.0	10.4	11.0	11.1	9.8	10.7	11.1	8.9	9.8	10.4	10.5	8.4	9.5
8.0	8.3	8.8	8.9	7.9	8.7	9.0	7.4	8.2	8.8	8.9	7.0	8.0
9.0	6.7	7.3	7.2	6.4	7.0	7.4	6.0	6.7	7.2	7.3	5.9	6.9
10.0	5.5	6.0	6.1	5.2	5.8	6.2	4.9	5.6	6.0	6.1	4.9	5.7
11.0	4.6	5.1	5.1	4.3	5.0	5.3	4.0	4.6	5.1	5.2	4.0	4.8
12.0	3.9	4.3	4.4	3.6	4.2	4.5	3.3	3.9	4.3	4.4	3.2	4.1
13.0	3.3	3.7	3.8	3.0	3.5	3.8	2.7	3.3	3.7	3.8	2.7	3.5
14.0	2.8	3.2	3.3	2.5	3.0	3.4	2.2	2.8	3.2	3.3	2.2	2.9
15.0	2.3	2.8	2.8	2.1	2.6	3.0	1.8	2.4	2.8	2.9	1.8	2.6
16.0	2.0	2.4	2.5	1.8	2.3	2.6	1.4	2.0	2.4	2.5	1.4	2.2
17.0	1.6	2.1	2.2	1.4	1.9	2.3	1.1	1.7	2.1	2.2	1.2	1.8
18.0	1.4	1.8	1.9	1.2	1.7	2.0	0.9	1.4	1.8	1.9	0.9	1.5
19.0	1.1	1.6	1.6	0.9	1.5	1.7	0.7	1.2	1.6	1.6		1.3
20.0	1.0	1.4	1.5	0.7	1.2	1.5		1.0	1.4	1.4		1.1
21.0	0.8	1.2	1.2		1.0	1.3		0.8	1.2	1.2		0.9
22.0					0.9	1.1			1.0	1.1		0.8
23.0					0.7	1.0			0.9	0.9		
24.0						0.8			0.7	0.8		
25.0						0.7						
C_n	7	7	7	6	6	6	5	5	5	5	4	4
% 2#	0	0	0	46	0	0	92	46	0	0	92	46
% 3#	46	0	0	46	46	0	46	46	46	0	92	46
% 4#	46	46	0	46	46	46	46	46	46	92	46	46
% 5#	46	46	92	46	46	92	46	46	92	92	46	92
% 6#	46	92	92	46	92	92	46	92	92	92	46	92
m/s	12.8	12.8	12.8	12.8	12.8	12.8	11.1	11.1	11.1	11.1	11.1	11.1

T

T unit：t

360° 50% 4.2 t

m / m	35.7	39.7	39.6	39.4	39.4	43.3	43.1	46.8	50.0			
7.0	9.9											
8.0	8.4	6.8	7.3	7.7	7.8							
9.0	7.2	5.7	6.3	6.6	6.7	5.7	6.3	5.7				
10.0	6.0	4.8	5.4	5.7	5.8	4.9	5.4	4.9	4.8			
11.0	5.1	4.1	4.5	4.8	4.9	4.2	4.7	4.3	4.1			
12.0	4.3	3.4	3.7	4.1	4.2	3.5	4.0	3.7	3.6			
13.0	3.7	2.8	3.2	3.5	3.6	2.9	3.4	3.1	3.1			
14.0	3.2	2.3	2.7	3.0	3.1	2.5	2.9	2.7	2.7			
15.0	2.8	1.9	2.3	2.6	2.6	2.0	2.5	2.2	2.3			
16.0	2.5	1.6	1.9	2.2	2.3	1.7	2.2	1.9	1.9			
17.0	2.1	1.2	1.6	1.9	2.0	1.4	1.8	1.6	1.6			
18.0	1.9	1.0	1.3	1.6	1.6	1.1	1.5	1.3	1.3			
19.0	1.6	0.7	1.1	1.4	1.4	0.9	1.3	1.1	1.1			
20.0	1.4		0.9	1.1	1.2	0.7	1.1	0.9	0.9			
21.0	1.2		0.7	0.9	1.0		0.9	0.7	0.7			
22.0	1.0			0.8	0.9		0.7					
23.0	0.9			0.7	0.7							
24.0	0.7											
25.0												
n	4	4	4	4	4	3	3	3	3			
% 2#	0	92	46	46	0	92	46	92	100			
% 3#	46	92	92	46	92	92	92	92	100			
% 4#	92	92	92	92	92	92	92	92	100			
% 5#	92	46	92	92	92	92	92	92	100			
% 6#	92	46	46	92	92	46	92	92	100			
m/s	11.1	11.1	11.1	11.1	11.1	11.1	11.1	11.1	11.1			

T

T unit：t

360° 50% 3.9 t

m \ m	10.7	14.4	14.3	14.2	18.0	17.9	17.8	17.7	21.7	21.4	21.2	25.3
3.0	40.0											
3.5	36.4	31.4	32.9	20.5								
4.0	27.4	25.6	26.9	18.8	23.7	24.7	25.6	14.3				
4.5	21.2	21.0	22.1	17.6	20.0	21.0	21.8	13.2	18.0	20.2	16.0	
5.0	17.0	16.9	17.9	16.5	17.3	18.1	18.9	12.7	15.6	17.6	15.5	
6.0	11.9	11.7	12.6	12.9	12.3	12.9	13.5	11.2	11.9	13.7	13.8	13.0
7.0	8.8	8.7	9.5	9.7	9.2	9.7	10.3	10.0	8.9	10.4	10.9	9.4
8.0		6.7	7.3	7.6	7.1	7.6	8.1	8.2	6.8	8.2	8.6	7.3
9.0		5.1	5.8	6.1	5.6	6.1	6.6	6.6	5.3	6.7	7.1	5.7
10.0		4.1	4.7	5.0	4.5	5.0	5.4	5.5	4.2	5.5	5.9	4.6
11.0		3.2		4.1	3.6	4.1	4.5	4.6	3.3	4.6	5.0	3.8
12.0					2.9	3.3	3.8	3.8	2.7	3.9	4.3	3.0
13.0					2.3	2.8	3.2	3.3	2.1	3.3	3.6	2.5
14.0					1.9	2.3	2.7	2.7	1.7	2.8	3.1	1.9
15.0									1.2	2.4	2.7	1.6
16.0									0.9	2.0	2.4	1.2
17.0										1.7	2.0	1.0
18.0										1.4	1.8	0.7
19.0												
20.0												
21.0												
22.0												
23.0												
24.0												
25.0												
C_n	11	10	10	10	9	9	9	9	8	8	8	7
% 2#	0	0	0	0	0	0	0	0	46	0	0	46
% 3#	0	46	0	0	46	0	0	0	46	0	0	46
% 4#	0	0	0	0	46	46	0	0	46	46	0	46
% 5#	0	0	46	0	0	46	46	0	0	46	46	46
% 6#	0	0	0	46	0	0	46	92	0	46	92	0
m/s	14.3	14.3	14.3	14.3	14.3	14.3	14.3	14.3	12.8	12.8	12.8	12.8

T

T unit：t

360°	50%	3.9 t

m / m	25.1	24.9	24.8	28.8	28.6	28.5	32.4	32.2	32.1	32.1	36.1	35.8
6.0	12.9	13.6	13.0	11.7	12.7	13.1	10.6	11.6	12.2	12.3		
7.0	10.2	10.8	10.9	9.6	10.5	10.9	8.7	9.5	10.2	10.3	8.2	9.3
8.0	8.1	8.6	8.7	7.7	8.4	8.8	7.2	8.0	8.6	8.7	6.8	7.9
9.0	6.5	7.0	7.1	6.2	6.9	7.2	5.9	6.6	7.0	7.1	5.7	6.7
10.0	5.4	5.9	6.0	5.1	5.7	6.1	4.8	5.4	5.9	5.9	4.7	5.6
11.0	4.5	5.0	5.0	4.2	4.8	5.1	3.9	4.5	5.0	5.0	3.9	4.7
12.0	3.8	4.2	4.3	3.4	4.1	4.4	3.1	3.8	4.2	4.3	3.1	3.9
13.0	3.2	3.6	3.7	2.9	3.4	3.7	2.6	3.2	3.6	3.7	2.6	3.3
14.0	2.7	3.1	3.2	2.4	3.0	3.2	2.1	2.7	3.1	3.2	2.1	2.8
15.0	2.3	2.7	2.8	2.0	2.5	2.8	1.7	2.3	2.7	2.8	1.7	2.4
16.0	1.9	2.4	2.4	1.6	2.2	2.5	1.4	2.0	2.4	2.4	1.3	2.1
17.0	1.6	2.0	2.1	1.4	1.9	2.2	1.1	1.6	2.0	2.1	1.0	1.8
18.0	1.4	1.8	1.8	1.1	1.6	1.9	0.8	1.3	1.8	1.8	0.8	1.5
19.0	1.1	1.5	1.6	0.8	1.4	1.6		1.1	1.5	1.5		1.3
20.0	0.9	1.3	1.3	0.7	1.2	1.5		0.9	1.3	1.4		1.1
21.0	0.7	1.1	1.2		1.0	1.2		0.7	1.1	1.2		0.9
22.0					0.8	1.1			0.9	1.0		0.7
23.0					0.7	0.9			0.8	0.9		
24.0						0.8			0.7	0.7		
25.0						0.7						
n	7	7	7	6	6	6	5	5	5	5	4	4
% 2#	0	0	0	46	0	0	92	46	0	0	92	46
% 3#	46	0	0	46	46	0	46	46	46	0	92	46
% 4#	46	46	0	46	46	46	46	46	46	92	46	46
% 5#	46	46	92	46	46	92	46	46	92	92	46	92
% 6#	46	92	92	46	92	92	46	92	92	92	46	92
m/s	12.8	12.8	12.8	12.8	12.8	12.8	11.1	11.1	11.1	11.1	11.1	11.1

T

T

unit：t

360° 50% 3.9 t

m / m	35.7	39.7	39.6	39.4	39.4	43.3	43.1	46.8	50.0			
7.0	9.7											
8.0	8.2	6.6	7.2	7.6	7.7							
9.0	7.1	5.6	6.1	6.5	6.6	5.5	6.1	5.6				
10.0	5.9	4.7	5.2	5.6	5.7	4.7	5.3	4.8	4.6			
11.0	4.9	3.9	4.4	4.7	4.8	4.0	4.6	4.1	4.0			
12.0	4.2	3.3	3.6	4.0	4.0	3.4	3.8	3.6	3.5			
13.0	3.6	2.7	3.1	3.4	3.5	2.8	3.3	3.0	3.0			
14.0	3.1	2.2	2.6	2.9	3.0	2.4	2.8	2.6	2.6			
15.0	2.7	1.8	2.2	2.5	2.6	2.0	2.4	2.2	2.2			
16.0	2.3	1.4	1.8	2.1	2.2	1.6	2.0	1.8	1.8			
17.0	2.0	1.2	1.5	1.8	1.9	1.3	1.7	1.5	1.5			
18.0	1.7	0.9	1.3	1.5	1.6	1.0	1.5	1.2	1.3			
19.0	1.5	0.7	1.0	1.3	1.4	0.8	1.2	1.0	1.0			
20.0	1.3		0.8	1.1	1.1		1.0	0.8	0.8			
21.0	1.1			0.9	0.9		0.8					
22.0	0.9			0.7	0.8		0.7					
23.0	0.8				0.7							
24.0	0.7											
25.0												
	4	4	4	4	4	3	3	3	3			
% 2#	0	92	46	46	0	92	46	92	100			
% 3#	46	92	92	46	92	92	92	92	100			
% 4#	92	92	92	92	92	92	92	92	100			
% 5#	92	46	92	92	92	92	92	92	100			
% 6#	92	46	46	92	92	46	92	92	100			
m/s	11.1	11.1	11.1	11.1	11.1	11.1	11.1	11.1	11.1			

Telescopic boom+Jib(TJ)

5 Telescopic boom+Jib(TJ) 5-3

5.1 Jib16 m, Outrigger 100% extended 5-3

5.1.1 Counterweight 13 t 5-3

5.1.2 Counterweight 10 t 5-5

5.1.3 Counterweight 6.5 t 5-7

5.1.4 Counterweight 4.2 t 5-9

5.1.5 Counterweight 3.9 t 5-11

5.2 Jib9.2 m, Outrigger 100% extended 5-13

5.2.1 Counterweight 13 t 5-13

5.2.2 Counterweight 10 t 5-15

5.2.3 Counterweight 6.5 t 5-17

5.2.4 Counterweight 4.2 t 5-19

5.2.5 Counterweight 3.9 t 5-21

BLANK PAGE

TJ

T	J

unit：t

360°	16 m	100%	13 t

m / m		10.7			36.1			39.7			43.3		
	°	0.0	20.0	40.0	0.0	20.0	40.0	0.0	20.0	40.0	0.0	20.0	40.0
3.0		4.1											
3.5		4.1											
4.0		4.0											
4.5		4.0											
5.0		3.9											
6.0		3.7											
7.0		3.6	3.4		3.9								
8.0		3.4	3.2		3.9			3.5			3.0		
9.0		3.2	3.0		3.8			3.4			3.0		
10.0		3.1	2.9		3.8			3.4			3.0		
12.0		2.8	2.7	2.4	3.7	3.1		3.3			3.0		
14.0		2.6	2.4	2.3	3.5	3.0		3.2	2.8		2.9	2.7	
16.0		2.3	2.2	2.3	3.4	2.9	2.4	3.2	2.8		2.9	2.6	
18.0		2.0	2.2	2.2	3.3	2.8	2.4	3.1	2.7	2.3	2.8	2.5	
20.0		1.7	1.8	2.1	3.2	2.7	2.3	3.0	2.6	2.3	2.7	2.5	2.2
22.0		1.4	1.5	2.0	3.0	2.6	2.3	2.9	2.5	2.2	2.7	2.4	2.2
24.0					2.9	2.5	2.2	2.8	2.4	2.2	2.6	2.3	2.2
26.0					2.8	2.4	2.2	2.6	2.4	2.2	2.5	2.3	2.1
28.0					2.6	2.4	2.2	2.2	2.3	2.1	2.5	2.2	2.1
30.0					2.3	2.3	2.2	1.8	2.2	2.1	2.2	2.2	2.1
32.0					2.0	2.2	2.2	1.5	1.8	2.1	1.8	2.2	2.1
34.0					1.6	1.9	2.1	1.3	1.6	1.7	1.6	1.8	2.1
36.0					1.3	1.6	1.8	1.0	1.3	1.5	1.3	1.6	1.7
38.0					1.0	1.3	1.5	0.8	1.0	1.2	1.2	1.4	1.5
40.0					0.8	1.0			0.8	1.0	1.0	1.1	1.3
42.0						0.8			0.7		0.8	0.9	1.1
44.0												0.8	0.9
46.0													
48.0													
n		1	1	1	1	1	1	1	1	1	1	1	1
%	2#	0	0	0	92	92	92	92	92	92	92	92	92
	3#	0	0	0	92	92	92	92	92	92	92	92	92
	4#	0	0	0	46	46	46	92	92	92	92	92	92
	5#	0	0	0	46	46	46	46	46	46	92	92	92
	6#	0	0	0	46	46	46	46	46	46	46	46	46
m/s		9	9	9	9	9	9	9	9	9	9	9	9

TJ

T	J

unit：t

360°	16 m	100%	13 t

m / m	46.8			50.0								
	0.0	20.0	40.0	0.0	20.0	40.0						
9.0	2.6											
10.0	2.6			2.3								
12.0	2.6			2.3								
14.0	2.6			2.3								
16.0	2.5	2.4		2.2								
18.0	2.5	2.3		2.2	2.2							
20.0	2.5	2.3	2.1	2.2	2.2							
22.0	2.4	2.2	2.1	2.2	2.1	2.0						
24.0	2.4	2.2	2.1	2.1	2.1	2.0						
26.0	2.3	2.2	2.1	2.1	2.1	2.0						
28.0	2.3	2.1	2.1	2.1	2.0	2.0						
30.0	2.0	2.1	2.0	1.9	2.0	2.0						
32.0	1.6	2.0	2.0	1.6	1.9	1.9						
34.0	1.4	1.7	1.9	1.4	1.6	1.9						
36.0	1.1	1.4	1.6	1.1	1.4	1.6						
38.0	1.0	1.2	1.4	0.9	1.2	1.4						
40.0	0.7	1.0	1.1	0.7	1.0	1.1						
42.0		0.8	0.9		0.8	0.9						
44.0			0.7			0.7						
46.0												
48.0												
n	1	1	1	1	1	1						
% 2#	92	92	92	100	100	100						
% 3#	92	92	92	100	100	100						
% 4#	92	92	92	100	100	100						
% 5#	92	92	92	100	100	100						
% 6#	92	92	92	100	100	100						
m/s	9	9	9	9	9	9						

TJ

T	J

unit：t

360°	16 m	100%	10 t

m		10.7			36.1			39.7			43.3		
	°	0.0	20.0	40.0	0.0	20.0	40.0	0.0	20.0	40.0	0.0	20.0	40.0
3.0		4.1											
3.5		4.1											
4.0		4.0											
4.5		4.0											
5.0		3.9											
6.0		3.7											
7.0		3.6	3.4		3.9								
8.0		3.4	3.2		3.9			3.5			3.0		
9.0		3.2	3.0		3.8			3.4			3.0		
10.0		3.1	2.9		3.8			3.4			3.0		
12.0		2.8	2.7	2.4	3.7	3.1		3.3			3.0		
14.0		2.6	2.4	2.3	3.5	3.0		3.2	2.8		2.9	2.7	
16.0		2.3	2.2	2.3	3.4	2.9	2.4	3.2	2.8		2.9	2.6	
18.0		2.0	2.2	2.2	3.3	2.8	2.4	3.1	2.7	2.3	2.8	2.5	
20.0		1.7	1.8	2.1	3.2	2.7	2.3	3.0	2.6	2.3	2.7	2.5	2.2
22.0		1.4	1.5	2.0	3.0	2.6	2.3	2.9	2.5	2.2	2.7	2.4	2.2
24.0					2.9	2.5	2.2	2.5	2.4	2.2	2.6	2.3	2.2
26.0					2.4	2.4	2.2	2.0	2.4	2.2	2.4	2.3	2.1
28.0					1.9	2.4	2.2	1.6	2.1	2.1	2.0	2.2	2.1
30.0					1.5	2.0	2.2	1.3	1.7	2.0	1.7	2.0	2.1
32.0					1.2	1.6	1.9	1.1	1.4	1.6	1.4	1.7	1.9
34.0					1.0	1.3	1.5	0.8	1.1	1.3	1.2	1.4	1.6
36.0					0.7	1.0	1.2		0.9	1.0	1.0	1.2	1.4
38.0						0.8	0.9			0.8	0.8	1.0	1.1
40.0												0.8	0.9
42.0													0.7
n		1	1	1	1	1	1	1	1	1	1	1	1
%	2#	0	0	0	92	92	92	92	92	92	92	92	92
	3#	0	0	0	92	92	92	92	92	92	92	92	92
	4#	0	0	0	46	46	46	92	92	92	92	92	92
	5#	0	0	0	46	46	46	46	46	46	92	92	92
	6#	0	0	0	46	46	46	46	46	46	46	46	46
m/s		9	9	9	9	9	9	9	9	9	9	9	9

TJ

T	J

unit：t

360°	16 m	100%	10 t

m		46.8			50.0								
		0.0	20.0	40.0	0.0	20.0	40.0						
9.0		2.6											
10.0		2.6			2.3								
12.0		2.6			2.3								
14.0		2.6			2.3								
16.0		2.5	2.4		2.2								
18.0		2.5	2.3		2.2	2.2							
20.0		2.5	2.3	2.1	2.2	2.2							
22.0		2.4	2.2	2.1	2.2	2.1	2.0						
24.0		2.4	2.2	2.1	2.1	2.1	2.0						
26.0		2.1	2.2	2.1	2.1	2.1	2.0						
28.0		1.8	2.1	2.1	1.7	2.0	2.0						
30.0		1.4	1.8	2.0	1.4	1.8	2.0						
32.0		1.2	1.5	1.8	1.1	1.5	1.7						
34.0		1.0	1.3	1.4	0.9	1.2	1.5						
36.0		0.7	1.0	1.2	0.7	1.0	1.2						
38.0			0.8	1.0		0.8	1.0						
40.0				0.8			0.7						
42.0													
n		1	1	1	1	1	1						
%	2#	92	92	92	100	100	100						
	3#	92	92	92	100	100	100						
	4#	92	92	92	100	100	100						
	5#	92	92	92	100	100	100						
	6#	92	92	92	100	100	100						
m/s		9	9	9	9	9	9						

TJ

T	J

unit：t

360°	16 m	100%	6.5 t

m	10.7			36.1			39.7			43.3		
°	0.0	20.0	40.0	0.0	20.0	40.0	0.0	20.0	40.0	0.0	20.0	40.0
3.0	4.1											
3.5	4.1											
4.0	4.0											
4.5	4.0											
5.0	3.9											
6.0	3.7											
7.0	3.6	3.4		3.9								
8.0	3.4	3.2		3.9			3.5			3.0		
9.0	3.2	3.0		3.8			3.4			3.0		
10.0	3.1	2.9		3.8			3.4			3.0		
12.0	2.8	2.7	2.4	3.7	3.1		3.3			3.0		
14.0	2.6	2.4	2.3	3.5	3.0		3.2	2.8		2.9	2.7	
16.0	2.3	2.2	2.3	3.4	2.9	2.4	3.2	2.8		2.9	2.6	
18.0	2.0	2.2	2.2	3.3	2.8	2.4	3.1	2.7	2.3	2.8	2.5	
20.0	1.7	1.8	2.1	3.2	2.7	2.3	2.7	2.6	2.3	2.7	2.5	2.2
22.0	1.4	1.5	2.0	2.7	2.6	2.3	2.2	2.5	2.2	2.6	2.4	2.2
24.0				2.2	2.5	2.2	1.7	2.2	2.2	2.1	2.3	2.2
26.0				1.7	2.3	2.2	1.3	1.8	2.1	1.7	2.1	2.1
28.0				1.3	1.8	2.2	1.0	1.4	1.7	1.4	1.7	2.0
30.0				1.0	1.4	1.7	0.8	1.1	1.4	1.1	1.4	1.7
32.0				0.7	1.1	1.4		0.8	1.1	0.8	1.1	1.4
34.0					0.8	1.0			0.8		0.9	1.1
36.0						0.7					0.7	0.9
38.0												0.7
40.0												
n	1	1	1	1	1	1	1	1	1	1	1	1
% 2#	0	0	0	92	92	92	92	92	92	92	92	92
% 3#	0	0	0	92	92	92	92	92	92	92	92	92
% 4#	0	0	0	46	46	46	92	92	92	92	92	92
% 5#	0	0	0	46	46	46	46	46	46	92	92	92
% 6#	0	0	0	46	46	46	46	46	46	46	46	46
m/s	9	9	9	9	9	9	9	9	9	9	9	9

TJ

T	J

unit：t

360°	16 m	100%	6.5 t

		46.8			50.0								
		0.0	20.0	40.0	0.0	20.0	40.0						
9.0		2.6											
10.0		2.6			2.3								
12.0		2.6			2.3								
14.0		2.6			2.3								
16.0		2.5	2.4		2.2								
18.0		2.5	2.3		2.2	2.2							
20.0		2.5	2.3	2.1	2.2	2.2							
22.0		2.3	2.2	2.1	2.2	2.1	2.0						
24.0		1.8	2.2	2.1	1.8	2.1	2.0						
26.0		1.5	1.9	2.1	1.4	1.9	2.0						
28.0		1.2	1.5	1.8	1.1	1.5	1.9						
30.0		0.9	1.2	1.5	0.8	1.2	1.5						
32.0			1.0	1.2		0.9	1.2						
34.0			0.7	1.0		0.7	1.0						
36.0				0.8			0.7						
38.0													
40.0													
		1	1	1	1	1	1						
	2#	92	92	92	100	100	100						
	3#	92	92	92	100	100	100						
	4#	92	92	92	100	100	100						
	5#	92	92	92	100	100	100						
	6#	92	92	92	100	100	100						
		9	9	9	9	9	9						

TJ

T	J

unit：t

360°	16 m	100%	4.2 t

m		10.7			36.1			39.7			43.3		
	°	0.0	20.0	40.0	0.0	20.0	40.0	0.0	20.0	40.0	0.0	20.0	40.0
3.0		4.1											
3.5		4.1											
4.0		4.0											
4.5		4.0											
5.0		3.9											
6.0		3.7											
7.0		3.6	3.4		3.9								
8.0		3.4	3.2		3.9			3.5			3.0		
9.0		3.2	3.0		3.8			3.4			3.0		
10.0		3.1	2.9		3.8			3.4			3.0		
12.0		2.8	2.7	2.4	3.7	3.1		3.3			3.0		
14.0		2.6	2.4	2.3	3.5	3.0		3.2	2.8		2.9	2.7	
16.0		2.3	2.2	2.3	3.4	2.9	2.4	3.2	2.8		2.9	2.6	
18.0		2.0	2.2	2.2	3.3	2.8	2.4	2.6	2.7	2.3	2.8	2.5	
20.0		1.7	1.8	2.1	2.5	2.7	2.3	1.9	2.6	2.3	2.3	2.5	2.2
22.0		1.4	1.5	2.0	1.9	2.6	2.3	1.5	2.0	2.2	1.8	2.4	2.2
24.0					1.4	2.0	2.2	1.1	1.6	2.0	1.4	1.9	2.2
26.0					1.0	1.5	2.0	0.8	1.2	1.6	1.1	1.5	1.9
28.0						1.1	1.5		0.9	1.2	0.8	1.2	1.5
30.0						0.8	1.2			0.9		0.9	1.2
32.0							0.8			0.7		0.7	0.9
34.0													0.7
36.0													
n		1	1	1	1	1	1	1	1	1	1	1	1
%	2#	0	0	0	92	92	92	92	92	92	92	92	92
	3#	0	0	0	92	92	92	92	92	92	92	92	92
	4#	0	0	0	46	46	46	92	92	92	92	92	92
	5#	0	0	0	46	46	46	46	46	46	92	92	92
	6#	0	0	0	46	46	46	46	46	46	46	46	46
m/s		9	9	9	9	9	9	9	9	9	9	9	9

TJ

T	J

unit：t

360°	16 m	100%	4.2 t

		46.8			50.0								
		0.0	20.0	40.0	0.0	20.0	40.0						
9.0		2.6											
10.0		2.6			2.3								
12.0		2.6			2.3								
14.0		2.6			2.3								
16.0		2.5	2.4		2.2								
18.0		2.5	2.3		2.2	2.2							
20.0		2.1	2.3	2.1	2.1	2.2							
22.0		1.6	2.2	2.1	1.6	2.1	2.0						
24.0		1.2	1.7	2.1	1.2	1.6	2.0						
26.0		0.9	1.3	1.7	0.9	1.3	1.7						
28.0			1.0	1.4		1.0	1.3						
30.0			0.8	1.1		0.7	1.0						
32.0				0.8			0.8						
34.0													
36.0													
		1	1	1	1	1	1						
	2#	92	92	92	100	100	100						
	3#	92	92	92	100	100	100						
	4#	92	92	92	100	100	100						
	5#	92	92	92	100	100	100						
	6#	92	92	92	100	100	100						
		9	9	9	9	9	9						

TJ

T	J

unit：t

360°	16 m	100%	3.9 t

m / m		10.7			36.1			39.7			43.3		
	°	0.0	20.0	40.0	0.0	20.0	40.0	0.0	20.0	40.0	0.0	20.0	40.0
3.0		4.1											
3.5		4.1											
4.0		4.0											
4.5		4.0											
5.0		3.9											
6.0		3.7											
7.0		3.6	3.4		3.9								
8.0		3.4	3.2		3.9			3.5			3.0		
9.0		3.2	3.0		3.8			3.4			3.0		
10.0		3.1	2.9		3.8			3.4			3.0		
12.0		2.8	2.7	2.4	3.7	3.1		3.3			3.0		
14.0		2.6	2.4	2.3	3.5	3.0		3.2	2.8		2.9	2.7	
16.0		2.3	2.2	2.3	3.4	2.9	2.4	3.2	2.8		2.9	2.6	
18.0		2.0	2.2	2.2	3.1	2.8	2.4	2.5	2.7	2.3	2.8	2.5	
20.0		1.7	1.8	2.1	2.4	2.7	2.3	1.8	2.5	2.3	2.3	2.5	2.2
22.0		1.4	1.5	2.0	1.8	2.5	2.3	1.4	2.0	2.2	1.7	2.3	2.2
24.0					1.3	1.9	2.2	1.0	1.6	2.0	1.4	1.9	2.2
26.0					0.9	1.5	1.9	0.7	1.1	1.5	1.0	1.5	1.7
28.0						1.1	1.4		0.8	1.1	0.8	1.1	1.5
30.0						0.7	1.1			0.9		0.9	1.1
32.0							0.7					0.7	0.9
34.0													0.7
36.0													
n		1	1	1	1	1	1	1	1	1	1	1	1
%	2#	0	0	0	92	92	92	92	92	92	92	92	92
	3#	0	0	0	92	92	92	92	92	92	92	92	92
	4#	0	0	0	46	46	46	92	92	92	92	92	92
	5#	0	0	0	46	46	46	46	46	46	92	92	92
	6#	0	0	0	46	46	46	46	46	46	46	46	46
m/s		9	9	9	9	9	9	9	9	9	9	9	9

TJ

T	J

unit：t

360°	16 m	100%	3.9 t

		46.8			50.0								
		0.0	20.0	40.0	0.0	20.0	40.0						
9.0		2.6											
10.0		2.6			2.3								
12.0		2.6			2.3								
14.0		2.6			2.3								
16.0		2.5	2.4		2.2								
18.0		2.5	2.3		2.2	2.2							
20.0		2.0	2.3	2.1	2.0	2.2							
22.0		1.5	2.1	2.1	1.5	2.1	2.0						
24.0		1.2	1.7	2.1	1.1	1.6	2.0						
26.0		0.8	1.3	1.7	0.8	1.3	1.6						
28.0			1.0	1.3		1.0	1.3						
30.0			0.7	1.0		0.7	1.0						
32.0				0.7			0.7						
34.0													
36.0													
		1	1	1	1	1	1						
	2#	92	92	92	100	100	100						
	3#	92	92	92	100	100	100						
	4#	92	92	92	100	100	100						
	5#	92	92	92	100	100	100						
	6#	92	92	92	100	100	100						
		9	9	9	9	9	9						

TJ

T	J

unit：t

360°	9.2 m	100%	13 t

m		10.7			36.1			39.7			43.3		
	°	0.0	20.0	40.0	0.0	20.0	40.0	0.0	20.0	40.0	0.0	20.0	40.0
3.0		7.9											
3.5		7.7	6.7										
4.0		7.4	6.7										
4.5		7.1	6.7										
5.0		6.8	6.7										
6.0		6.3	6.5	5.2	7.6								
7.0		5.8	6.1	5.2	7.6			6.3					
8.0		5.2	5.7	5.2	7.5			6.3			5.3		
9.0		4.7	5.3	5.1	7.4	6.5		6.3			5.3		
10.0		4.2	4.9	4.9	7.2	6.4		6.3	5.8		5.3		
12.0		3.3	4.0	4.2	7.0	6.1	5.2	6.1	5.6	4.9	5.3	4.8	
14.0		2.7	3.3	3.4	6.7	5.8	5.1	6.0	5.4	4.9	5.2	4.8	4.5
16.0		2.0	2.5	2.4	6.4	5.5	4.9	5.8	5.2	4.7	5.0	4.7	4.3
18.0					5.8	5.3	4.7	5.5	5.0	4.5	4.8	4.5	4.2
20.0					5.2	5.0	4.6	4.7	4.8	4.3	4.5	4.2	4.1
22.0					4.3	4.7	4.3	4.3	4.3	4.1	3.9	4.0	3.9
24.0					3.6	3.9	4.0	3.8	3.8	4.0	3.3	3.6	3.7
26.0					3.0	3.3	3.5	3.4	3.5	3.6	2.8	3.1	3.2
28.0					2.4	2.7	2.9	3.0	3.1	3.1	2.4	2.6	2.8
30.0					2.0	2.2	2.4	2.6	2.8	2.8	2.1	2.3	2.4
32.0					1.7	1.8	2.0	2.3	2.4	2.5	1.7	1.9	1.9
34.0					1.3	1.5		2.0	2.1	2.2	1.4	1.6	1.7
36.0					1.1	1.1		1.7	1.8		1.2	1.3	1.4
38.0					0.8	0.9		1.4	1.5		1.0	1.2	
40.0								1.2	1.3		0.8	0.9	
42.0								1.1	1.1		0.7	0.8	
44.0								0.9					
n		2	2	2	2	2	2	2	2	2	2	1	1
%	2#	0	0	0	92	92	92	92	92	92	92	92	92
	3#	0	0	0	92	92	92	92	92	92	92	92	92
	4#	0	0	0	46	46	46	92	92	92	92	92	92
	5#	0	0	0	46	46	46	46	46	46	92	92	92
	6#	0	0	0	46	46	46	46	46	46	46	46	46
m/s		9	9	9	9	9	9	9	9	9	9	9	9

TJ

T	J

unit：t

360°	9.2 m	100%	13 t

		46.8			50.0								
		0.0	20.0	40.0	0.0	20.0	40.0						
12.0		3.9	4.0		3.4								
14.0		3.9	3.9		3.4	3.4							
16.0		3.8	3.8	3.6	3.4	3.4	3.3						
18.0		3.7	3.6	3.5	3.3	3.3	3.2						
20.0		3.6	3.5	3.3	3.2	3.2	3.1						
22.0		3.4	3.4	3.2	3.1	3.0	3.0						
24.0		3.1	3.2	3.1	2.9	2.9	2.9						
26.0		2.6	2.8	3.0	2.6	2.8	2.8						
28.0		2.2	2.4	2.6	2.2	2.4	2.6						
30.0		1.8	2.0	2.2	1.8	1.9	2.2						
32.0		1.5	1.7	1.8	1.5	1.7	1.8						
34.0		1.2	1.4	1.5	1.2	1.4	1.5						
36.0		1.0	1.1	1.3	1.0	1.1	1.3						
38.0		0.8	1.0	1.0	0.8	0.9	1.0						
40.0			0.7	0.8		0.7	0.8						
42.0													
44.0													
		1	1	1	1	1	1						
	2#	92	92	92	100	100	100						
	3#	92	92	92	100	100	100						
	4#	92	92	92	100	100	100						
	5#	92	92	92	100	100	100						
	6#	92	92	92	100	100	100						
		9	9	9	9	9	9						

TJ

T	J

unit：t

360°	9.2 m	100%	10 t

m		10.7			36.1			39.7			43.3		
	°	0.0	20.0	40.0	0.0	20.0	40.0	0.0	20.0	40.0	0.0	20.0	40.0
3.0		7.9											
3.5		7.7	6.7										
4.0		7.4	6.7										
4.5		7.1	6.7										
5.0		6.8	6.7										
6.0		6.3	6.5	5.2	7.6								
7.0		5.8	6.1	5.2	7.6			6.3					
8.0		5.2	5.7	5.2	7.5			6.3			5.3		
9.0		4.7	5.3	5.1	7.4	6.5		6.3			5.3		
10.0		4.2	4.9	4.9	7.2	6.4		6.3	5.8		5.3		
12.0		3.3	4.0	4.2	7.0	6.1	5.2	6.1	5.6	4.9	5.3	4.8	
14.0		2.7	3.3	3.4	6.7	5.8	5.1	6.0	5.4	4.9	5.2	4.8	4.5
16.0		2.0	2.5	2.4	6.3	5.5	4.9	5.8	5.2	4.7	5.0	4.7	4.3
18.0					5.1	5.3	4.7	5.5	5.0	4.5	4.7	4.5	4.2
20.0					4.1	4.6	4.6	4.7	4.8	4.3	3.8	4.2	4.1
22.0					3.2	3.7	4.0	4.1	4.3	4.1	3.2	3.4	3.7
24.0					2.6	3.0	3.3	3.4	3.7	3.9	2.7	2.9	3.2
26.0					2.1	2.4	2.6	2.9	3.1	3.4	2.2	2.5	2.6
28.0					1.6	1.9	2.1	2.4	2.6	2.8	1.8	2.0	2.2
30.0					1.3	1.5	1.7	2.0	2.2	2.4	1.5	1.7	1.8
32.0					1.0	1.2	1.3	1.7	1.9	1.9	1.3	1.4	1.5
34.0					0.7	0.9		1.4	1.5	1.6	1.0	1.2	1.3
36.0								1.1	1.2		0.8	1.0	1.0
38.0								0.9	1.0			0.7	
40.0								0.7	0.8				
n		2	2	2	2	2	2	2	2	2	2	1	1
%	2#	0	0	0	92	92	92	92	92	92	92	92	92
	3#	0	0	0	92	92	92	92	92	92	92	92	92
	4#	0	0	0	46	46	46	92	92	92	92	92	92
	5#	0	0	0	46	46	46	46	46	46	92	92	92
	6#	0	0	0	46	46	46	46	46	46	46	46	46
m/s		9	9	9	9	9	9	9	9	9	9	9	9

TJ

T	J

unit：t

360°	9.2 m	100%	10 t

m / m	46.8			50.0								
	0.0	20.0	40.0	0.0	20.0	40.0						
12.0	3.9	4.0		3.4								
14.0	3.9	3.9		3.4	3.4							
16.0	3.8	3.8	3.6	3.4	3.4	3.3						
18.0	3.7	3.6	3.5	3.3	3.3	3.2						
20.0	3.6	3.5	3.3	3.2	3.2	3.1						
22.0	2.9	3.3	3.2	2.9	3.0	3.0						
24.0	2.5	2.7	2.9	2.4	2.7	2.9						
26.0	2.0	2.2	2.5	2.0	2.3	2.5						
28.0	1.6	1.9	2.0	1.6	1.8	2.0						
30.0	1.3	1.5	1.7	1.3	1.5	1.6						
32.0	1.0	1.3	1.3	1.0	1.2	1.4						
34.0	0.8	1.0	1.1	0.8	1.0	1.1						
36.0		0.8	0.9		0.7	0.9						
38.0												
40.0												
n	1	1	1	1	1	1						
% 2#	92	92	92	100	100	100						
% 3#	92	92	92	100	100	100						
% 4#	92	92	92	100	100	100						
% 5#	92	92	92	100	100	100						
% 6#	92	92	92	100	100	100						
m/s	9	9	9	9	9	9						

TJ

T	J

unit：t

360°	9.2 m	100%	6.5 t

m		10.7			36.1			39.7			43.3		
	°	0.0	20.0	40.0	0.0	20.0	40.0	0.0	20.0	40.0	0.0	20.0	40.0
3.0		7.9											
3.5		7.7	6.7										
4.0		7.4	6.7										
4.5		7.1	6.7										
5.0		6.8	6.7										
6.0		6.3	6.5	5.2	7.6								
7.0		5.8	6.1	5.2	7.6			6.3					
8.0		5.2	5.7	5.2	7.5			6.3			5.3		
9.0		4.7	5.3	5.1	7.4	6.5		6.3			5.3		
10.0		4.2	4.9	4.9	7.2	6.4		6.3	5.8		5.3		
12.0		3.3	4.0	4.2	7.0	6.1	5.2	6.1	5.6	4.9	5.3	4.8	
14.0		2.7	3.3	3.4	6.5	5.8	5.1	6.0	5.4	4.9	5.2	4.8	4.5
16.0		2.0	2.5	2.4	5.1	5.5	4.9	5.8	5.2	4.7	4.6	4.7	4.3
18.0					3.9	4.5	4.7	4.8	5.0	4.5	3.6	4.0	4.2
20.0					3.1	3.6	4.0	3.8	4.3	4.3	2.9	3.3	3.5
22.0					2.4	2.8	3.2	3.2	3.5	3.7	2.4	2.7	2.9
24.0					1.9	2.2	2.5	2.6	2.9	3.1	1.9	2.2	2.4
26.0					1.4	1.7	1.9	2.1	2.4	2.6	1.6	1.7	1.9
28.0					1.0	1.3	1.5	1.7	2.0	2.1	1.2	1.4	1.6
30.0					0.7	0.9	1.1	1.4	1.6	1.8	1.0	1.1	1.3
32.0							0.7	1.1	1.3	1.4	0.7	0.9	1.0
34.0								0.8	1.0	1.1		0.7	0.8
36.0									0.8				
n		2	2	2	2	2	2	2	2	2	2	1	1
%	2#	0	0	0	92	92	92	92	92	92	92	92	92
	3#	0	0	0	92	92	92	92	92	92	92	92	92
	4#	0	0	0	46	46	46	92	92	92	92	92	92
	5#	0	0	0	46	46	46	46	46	46	92	92	92
	6#	0	0	0	46	46	46	46	46	46	46	46	46
m/s		9	9	9	9	9	9	9	9	9	9	9	9

TJ

T	J

unit：t

360°	9.2 m	100%	6.5 t

m / m	46.8			50.0								
	0.0	20.0	40.0	0.0	20.0	40.0						
12.0	3.9	4.0		3.4								
14.0	3.9	3.9		3.4	3.4							
16.0	3.8	3.8	3.6	3.4	3.4	3.3						
18.0	3.4	3.6	3.5	3.3	3.3	3.2						
20.0	2.7	3.0	3.3	2.7	3.0	3.1						
22.0	2.1	2.4	2.7	2.1	2.4	2.7						
24.0	1.7	2.0	2.2	1.6	1.9	2.2						
26.0	1.3	1.5	1.7	1.3	1.6	1.8						
28.0	1.0	1.2	1.4	1.0	1.2	1.4						
30.0	0.7	1.0	1.1	0.7	0.9	1.1						
32.0		0.7	0.8		0.7	0.8						
34.0												
36.0												
n	1	1	1	1	1	1						
% 2#	92	92	92	100	100	100						
% 3#	92	92	92	100	100	100						
% 4#	92	92	92	100	100	100						
% 5#	92	92	92	100	100	100						
% 6#	92	92	92	100	100	100						
m/s	9	9	9	9	9	9						

TJ

T	J

unit：t

360°	9.2 m	100%	4.2 t

m		10.7			36.1			39.7			43.3		
	°	0.0	20.0	40.0	0.0	20.0	40.0	0.0	20.0	40.0	0.0	20.0	40.0
3.0		7.9											
3.5		7.7	6.7										
4.0		7.4	6.7										
4.5		7.1	6.7										
5.0		6.8	6.7										
6.0		6.3	6.5	5.2	7.6								
7.0		5.8	6.1	5.2	7.6			6.3					
8.0		5.2	5.7	5.2	7.5			6.3			5.3		
9.0		4.7	5.3	5.1	7.4	6.5		6.3			5.3		
10.0		4.2	4.9	4.9	7.2	6.4		6.3	5.8		5.3		
12.0		3.3	4.0	4.2	6.9	6.1	5.2	6.1	5.6	4.9	5.3	4.8	
14.0		2.7	3.3	3.4	5.1	5.8	5.1	6.0	5.4	4.9	4.7	4.8	4.5
16.0		2.0	2.5	2.4	3.8	4.5	4.9	4.7	5.2	4.7	3.5	4.0	4.3
18.0					2.9	3.4	3.8	3.7	4.2	4.5	2.8	3.1	3.5
20.0					2.1	2.6	2.9	2.9	3.3	3.6	2.2	2.5	2.8
22.0					1.6	1.9	2.3	2.3	2.7	2.9	1.7	2.0	2.2
24.0					1.1	1.4	1.7	1.8	2.1	2.3	1.3	1.6	1.7
26.0					0.7	1.0	1.2	1.4	1.7	1.8	1.0	1.2	1.4
28.0							0.8	1.1	1.3	1.5	0.7	0.9	1.1
30.0								0.8	1.0	1.1			0.8
32.0									0.7	0.8			
n		2	2	2	2	2	2	2	2	2	2	1	1
%	2#	0	0	0	92	92	92	92	92	92	92	92	92
	3#	0	0	0	92	92	92	92	92	92	92	92	92
	4#	0	0	0	46	46	46	92	92	92	92	92	92
	5#	0	0	0	46	46	46	46	46	46	92	92	92
	6#	0	0	0	46	46	46	46	46	46	46	46	46
m/s		9	9	9	9	9	9	9	9	9	9	9	9

TJ

T	J

unit：t

360°	9.2 m	100%	4.2 t

m / m	46.8			50.0								
	0.0	20.0	40.0	0.0	20.0	40.0						
12.0	3.9	4.0		3.4								
14.0	3.9	3.9		3.4	3.4							
16.0	3.3	3.8	3.6	3.3	3.4	3.3						
18.0	2.5	2.9	3.3	2.5	2.9	3.2						
20.0	1.9	2.3	2.6	1.9	2.3	2.6						
22.0	1.4	1.7	2.0	1.4	1.8	2.0						
24.0	1.1	1.4	1.6	1.1	1.3	1.5						
26.0	0.8	1.0	1.2	0.7	1.0	1.2						
28.0		0.7	0.9		0.7	0.9						
30.0												
32.0												
n	1	1	1	1	1	1						
% 2#	92	92	92	100	100	100						
% 3#	92	92	92	100	100	100						
% 4#	92	92	92	100	100	100						
% 5#	92	92	92	100	100	100						
% 6#	92	92	92	100	100	100						
m/s	9	9	9	9	9	9						

TJ

T	J

unit：t

360°	9.2 m	100%	3.9 t

m		10.7			36.1			39.7			43.3		
	°	0.0	20.0	40.0	0.0	20.0	40.0	0.0	20.0	40.0	0.0	20.0	40.0
3.0		7.9											
3.5		7.7	6.7										
4.0		7.4	6.7										
4.5		7.1	6.7										
5.0		6.8	6.7										
6.0		6.3	6.5	5.2	7.6								
7.0		5.8	6.1	5.2	7.6			6.3					
8.0		5.2	5.7	5.2	7.5			6.3			5.3		
9.0		4.7	5.3	5.1	7.4	6.5		6.3			5.3		
10.0		4.2	4.9	4.9	7.2	6.4		6.3	5.8		5.3		
12.0		3.3	4.0	4.2	6.7	6.1	5.2	6.1	5.6	4.9	5.3	4.8	
14.0		2.7	3.3	3.4	5.0	5.8	5.1	5.9	5.4	4.9	4.5	4.8	4.5
16.0		2.0	2.5	2.4	3.7	4.4	4.9	4.5	5.1	4.7	3.4	3.9	4.3
18.0					2.7	3.3	3.7	3.6	4.1	4.4	2.7	3.1	3.4
20.0					2.0	2.5	2.9	2.8	3.2	3.5	2.1	2.4	2.7
22.0					1.4	1.8	2.2	2.2	2.6	2.8	1.6	1.9	2.1
24.0					1.0	1.3	1.6	1.8	2.0	2.3	1.2	1.5	1.7
26.0						0.9	1.1	1.3	1.6	1.8	0.8	1.1	1.3
28.0							0.7	1.0	1.2	1.4	0.7	0.8	1.0
30.0								0.7	0.9	1.1			0.7
32.0										0.8			
n		2	2	2	2	2	2	2	2	2	2	1	1
%	2#	0	0	0	92	92	92	92	92	92	92	92	92
	3#	0	0	0	92	92	92	92	92	92	92	92	92
	4#	0	0	0	46	46	46	92	92	92	92	92	92
	5#	0	0	0	46	46	46	46	46	46	92	92	92
	6#	0	0	0	46	46	46	46	46	46	46	46	46
m/s		9	9	9	9	9	9	9	9	9	9	9	9

TJ

T	J

unit：t

360°	9.2 m	100%	3.9 t

m / m	46.8			50.0								
	0.0	20.0	40.0	0.0	20.0	40.0						
12.0	3.9	4.0		3.4								
14.0	3.9	3.9		3.4	3.4							
16.0	3.2	3.7	3.6	3.2	3.4	3.3						
18.0	2.5	2.9	3.2	2.4	2.8	3.2						
20.0	1.8	2.2	2.5	1.8	2.2	2.5						
22.0	1.4	1.7	2.0	1.3	1.6	1.9						
24.0	1.0	1.3	1.5	1.0	1.3	1.5						
26.0	0.7	1.0	1.1	0.7	0.9	1.2						
28.0			0.8		0.7	0.8						
30.0												
32.0												
n	1	1	1	1	1	1						
% 2#	92	92	92	100	100	100						
% 3#	92	92	92	100	100	100						
% 4#	92	92	92	100	100	100						
% 5#	92	92	92	100	100	100						
% 6#	92	92	92	100	100	100						
m/s	9	9	9	9	9	9						

Telescopic boom+Auxiliary jib(TA)

6 Telescopic boom+Auxiliary jib(TA) 6-3

6.1 Jib3 m, Outrigger 100% extended 6-3

6.1.1 Counterweight 13 t 6-3

6.1.2 Counterweight 10 t 6-4

6.1.3 Counterweight 6.5 t 6-5

6.1.4 Counterweight 4.2 t 6-6

6.1.5 Counterweight 3.9 t 6-7

BLANK PAGE

TA

T	A

unit：t

360°	3 m	100%	13 t

m / m	39.4	43.1	46.8	50.0								
8.0	9.1											
9.0	8.8	7.4										
10.0	8.6	7.2	6.5									
12.0	7.8	6.9	6.2	5.5								
14.0	7.2	6.5	6.0	5.3								
16.0	6.5	6.0	5.6	5.0								
18.0	5.5	5.5	5.3	4.8								
20.0	4.9	4.7	4.9	4.4								
22.0	4.2	4.2	4.2	4.1								
24.0	3.7	3.6	3.5	3.5								
26.0	3.2	3.1	2.9	2.9								
28.0	2.7	2.6	2.4	2.4								
30.0	2.3	2.2	2.2	2.0								
32.0	2.0	1.8	1.9	1.6								
34.0	1.7	1.5	1.6	1.3								
36.0	1.4	1.2	1.3	1.0								
38.0	1.2	1.0	1.0	0.8								
40.0		0.8										
n	2	2	2	2								
% 2#	0	46	92	100								
% 3#	92	92	92	100								
% 4#	92	92	92	100								
% 5#	92	92	92	100								
% 6#	92	92	92	100								
m/s	9	9	9	9								

TA

T	A

unit：t

360°	3 m	100%	10 t

m / m	39.4	43.1	46.8	50.0								
8.0	9.1											
9.0	8.8	7.4										
10.0	8.6	7.2	6.5									
12.0	7.8	6.9	6.2	5.5								
14.0	7.2	6.5	6.0	5.3								
16.0	6.5	6.0	5.6	5.0								
18.0	5.4	5.2	5.0	4.8								
20.0	4.5	4.3	4.0	4.0								
22.0	3.6	3.5	3.3	3.3								
24.0	3.0	2.9	2.6	2.7								
26.0	2.5	2.4	2.1	2.1								
28.0	2.1	1.9	1.7	1.7								
30.0	1.7	1.5	1.3	1.3								
32.0	1.4	1.3	1.0	1.0								
34.0	1.1	1.0	0.8	0.7								
36.0	0.9	0.7										
38.0												
40.0												
n	2	2	2	2								
% 2#	0	46	92	100								
% 3#	92	92	92	100								
% 4#	92	92	92	100								
% 5#	92	92	92	100								
% 6#	92	92	92	100								
m/s	9	9	9	9								

TA

T	A

unit：t

360°	3 m	100%	6.5 t

m / m	39.4	43.1	46.8	50.0								
8.0	9.1											
9.0	8.8	7.4										
10.0	8.6	7.2	6.5									
12.0	7.8	6.9	6.2	5.5								
14.0	7.0	6.5	6.0	5.3								
16.0	5.5	5.3	5.0	5.0								
18.0	4.4	4.2	3.9	3.9								
20.0	3.5	3.3	3.1	3.1								
22.0	2.9	2.7	2.5	2.5								
24.0	2.3	2.1	1.9	1.9								
26.0	1.8	1.7	1.4	1.5								
28.0	1.5	1.3	1.1	1.1								
30.0	1.1	1.0	0.8	0.8								
32.0	0.9	0.7										
n	2	2	2	2								
% 2#	0	46	92	100								
% 3#	92	92	92	100								
% 4#	92	92	92	100								
% 5#	92	92	92	100								
% 6#	92	92	92	100								
m/s	9	9	9	9								

TA

T	A

unit：t

360°	3 m	100%	4.2 t

m / m		39.4	43.1	46.8	50.0								
8.0		9.1											
9.0		8.8	7.4										
10.0		8.6	7.2	6.5									
12.0		7.5	6.9	6.2	5.5								
14.0		5.6	5.4	5.2	5.2								
16.0		4.3	4.2	3.9	3.9								
18.0		3.4	3.2	3.0	3.0								
20.0		2.6	2.5	2.2	2.2								
22.0		2.1	1.9	1.7	1.6								
24.0		1.6	1.4	1.2	1.2								
26.0		1.2	1.0	0.8	0.8								
28.0		0.9	0.7										
C_n		2	2	2	2								
%	2#	0	46	92	100								
	3#	92	92	92	100								
	4#	92	92	92	100								
	5#	92	92	92	100								
	6#	92	92	92	100								
m/s		9	9	9	9								

TA

T	A

unit：t

360°	3 m	100%	3.9 t

m	39.4	43.1	46.8	50.0
8.0	9.1			
9.0	8.8	7.4		
10.0	8.6	7.2	6.5	
12.0	7.3	6.9	6.2	5.5
14.0	5.5	5.3	5.0	5.0
16.0	4.2	4.1	3.8	3.8
18.0	3.3	3.1	2.8	2.9
20.0	2.6	2.4	2.2	2.2
22.0	1.9	1.8	1.6	1.6
24.0	1.5	1.4	1.2	1.1
26.0	1.1	1.0	0.8	0.7
28.0	0.8	0.7		
n	2	2	2	2
% 2#	0	46	92	100
% 3#	92	92	92	100
% 4#	92	92	92	100
% 5#	92	92	92	100
% 6#	92	92	92	100
m/s	9	9	9	9

BLANK PAGE

Telescopic boom+Auxiliary boom nose(TN)

7 Telescopic boom+Auxiliary boom nose(TN) 7-3

7.1 Outrigger 100% extended 7-3

7.1.1 Counterweight 13 t 7-3

7.1.2 Counterweight 10 t 7-6

7.1.3 Counterweight 6.5 t 7-9

7.1.4 Counterweight 4.2 t 7-12

7.1.5 Counterweight 3.9 t 7-15

7.2 Outrigger 50% extended 7-18

7.2.1 Counterweight 13 t 7-18

7.2.2 Counterweight 10 t 7-21

7.2.3 Counterweight 6.5 t 7-24

7.2.4 Counterweight 4.2 t 7-27

7.2.5 Counterweight 3.9 t 7-30

BLANK PAGE

TN

T	N

unit：t

360°	100%	13 t

m \ m	10.7	14.4	14.3	14.2	18.0	17.9	17.8	17.7	21.7	21.4	21.2	25.3
3.0	4.8											
3.5	4.8	4.8	4.8	4.8								
4.0	4.8	4.8	4.8	4.8	4.8	4.8	4.8	4.8				
4.5	4.8	4.8	4.8	4.8	4.8	4.8	4.8	4.8	4.8	4.8	4.8	
5.0	4.8	4.8	4.8	4.8	4.8	4.8	4.8	4.8	4.8	4.8	4.8	
6.0	4.8	4.8	4.8	4.8	4.8	4.8	4.8	4.8	4.8	4.8	4.8	4.8
7.0	4.8	4.8	4.8	4.8	4.8	4.8	4.8	4.8	4.8	4.8	4.8	4.8
8.0		4.8	4.8	4.8	4.8	4.8	4.8	4.8	4.8	4.8	4.8	4.8
9.0		4.8	4.8	4.8	4.8	4.8	4.8	4.8	4.8	4.8	4.8	4.8
10.0		4.8	4.8	4.8	4.8	4.8	4.8	4.8	4.8	4.8	4.8	4.8
11.0		4.8	4.8	4.8	4.8	4.8	4.8	4.8	4.8	4.8	4.8	4.8
12.0					4.8	4.8	4.8	4.8	4.8	4.8	4.8	4.8
13.0					4.8	4.8	4.8	4.8	4.8	4.8	4.8	4.8
14.0					4.8	4.8	4.8	4.8	4.8	4.8	4.8	4.8
15.0									4.8	4.8	4.8	4.8
16.0									4.8	4.8	4.8	4.8
17.0									4.8	4.8	4.5	4.8
18.0									4.3	4.8	4.0	4.7
19.0												4.2
20.0												3.8
21.0												3.4
22.0												
23.0												
24.0												
25.0												
26.0												
27.0												
28.0												
29.0												
30.0												
31.0												
32.0												
33.0												
34.0												
n	1	1	1	1	1	1	1	1	1	1	1	1
% 2#	0	0	0	0	0	0	0	0	46	0	0	46
% 3#	0	46	0	0	46	0	0	0	46	0	0	46
% 4#	0	0	0	0	46	46	0	0	46	46	0	46
% 5#	0	0	46	0	0	46	46	0	0	46	46	46
% 6#	0	0	0	46	0	0	46	92	0	46	92	0
m/s	14.3	14.3	14.3	14.3	14.3	14.3	14.3	14.3	12.8	12.8	12.8	12.8

TN

T	N

unit：t

360°	100%	13 t

m \ m	25.1	24.9	24.8	28.8	28.6	28.5	32.4	32.2	32.1	32.1	36.1	35.8
6.0	4.8	4.8	4.8	4.8	4.8	4.8	4.8	4.8	4.8	4.8		
7.0	4.8	4.8	4.8	4.8	4.8	4.8	4.8	4.8	4.8	4.8	4.8	4.8
8.0	4.8	4.8	4.8	4.8	4.8	4.8	4.8	4.8	4.8	4.8	4.8	4.8
9.0	4.8	4.8	4.8	4.8	4.8	4.8	4.8	4.8	4.8	4.8	4.8	4.8
10.0	4.8	4.8	4.8	4.8	4.8	4.8	4.8	4.8	4.8	4.8	4.8	4.8
11.0	4.8	4.8	4.8	4.8	4.8	4.8	4.8	4.8	4.8	4.8	4.8	4.8
12.0	4.8	4.8	4.8	4.8	4.8	4.8	4.8	4.8	4.8	4.8	4.8	4.8
13.0	4.8	4.8	4.8	4.8	4.8	4.8	4.8	4.8	4.8	4.8	4.8	4.8
14.0	4.8	4.8	4.8	4.8	4.8	4.8	4.8	4.8	4.8	4.8	4.8	4.8
15.0	4.8	4.8	4.8	4.8	4.8	4.8	4.8	4.8	4.8	4.8	4.8	4.8
16.0	4.8	4.8	4.8	4.8	4.8	4.8	4.8	4.8	4.8	4.8	4.8	4.8
17.0	4.8	4.8	4.8	4.8	4.8	4.8	4.8	4.8	4.8	4.8	4.8	4.8
18.0	4.8	4.8	4.5	4.8	4.8	4.8	4.8	4.8	4.8	4.8	4.8	4.8
19.0	4.8	4.8	4.2	4.6	4.8	4.8	4.3	4.8	4.8	4.7	4.3	4.8
20.0	4.5	4.8	4.0	4.2	4.7	4.5	3.9	4.5	4.8	4.4	3.9	4.6
21.0	4.0	4.5	3.8	3.7	4.3	4.2	3.5	4.1	4.4	4.1	3.5	4.2
22.0				3.4	4.0	4.0	3.1	3.7	4.1	3.9	3.1	3.9
23.0				3.1	3.7	3.8	2.9	3.4	3.8	3.7	2.8	3.6
24.0				2.8	3.4	3.6	2.5	3.1	3.5	3.5	2.5	3.2
25.0				2.6	3.1	3.4	2.3	2.9	3.3	3.3	2.3	3.0
26.0							2.1	2.6	3.0	3.0	2.1	2.8
27.0							1.8	2.4	2.8	2.8	1.8	2.5
28.0							1.7	2.2	2.6	2.6	1.7	2.3
29.0											1.4	2.2
30.0											1.3	2.0
31.0											1.1	1.8
32.0											1.0	1.6
33.0												
34.0												
35.0												
36.0												
37.0												
38.0												
39.0												
n	1	1	1	1	1	1	1	1	1	1	1	1
% 2#	0	0	0	46	0	0	92	46	0	0	92	46
% 3#	46	0	0	46	46	0	46	46	46	0	92	46
% 4#	46	46	0	46	46	46	46	46	46	92	46	46
% 5#	46	46	92	46	46	92	46	46	92	92	46	92
% 6#	46	92	92	46	92	92	46	92	92	92	46	92
m/s	12.8	12.8	12.8	12.8	12.8	12.8	11.1	11.1	11.1	11.1	11.1	11.1

TN

T N unit：t

360° 100% 13 t

m / m	35.7	39.7	39.6	39.4	39.4	43.3	43.1	46.8	50.0			
7.0	4.8											
8.0	4.8	4.8	4.8	4.8	4.8							
9.0	4.8	4.8	4.8	4.8	4.8	4.8	4.8	4.8				
10.0	4.8	4.8	4.8	4.8	4.8	4.8	4.8	4.8	4.8			
11.0	4.8	4.8	4.8	4.8	4.8	4.8	4.8	4.8	4.8			
12.0	4.8	4.8	4.8	4.8	4.8	4.8	4.8	4.8	4.8			
13.0	4.8	4.8	4.8	4.8	4.8	4.8	4.8	4.8	4.8			
14.0	4.8	4.8	4.8	4.8	4.8	4.8	4.8	4.8	4.8			
15.0	4.8	4.8	4.8	4.8	4.8	4.8	4.8	4.8	4.8			
16.0	4.8	4.8	4.8	4.8	4.8	4.8	4.8	4.8	4.8			
17.0	4.8	4.8	4.8	4.8	4.8	4.8	4.8	4.8	4.8			
18.0	4.8	4.8	4.8	4.8	4.8	4.8	4.8	4.8	4.8			
19.0	4.8	4.4	4.8	4.8	4.8	4.6	4.8	4.8	4.8			
20.0	4.8	3.9	4.3	4.6	4.7	4.1	4.6	4.4	4.4			
21.0	4.5	3.6	4.0	4.3	4.3	3.8	4.2	3.9	4.0			
22.0	4.1	3.2	3.6	3.9	3.9	3.4	3.8	3.6	3.6			
23.0	3.8	2.9	3.3	3.6	3.6	3.0	3.5	3.2	3.3			
24.0	3.5	2.7	3.0	3.2	3.3	2.8	3.2	3.0	3.0			
25.0	3.3	2.4	2.7	3.0	3.1	2.6	2.9	2.7	2.8			
26.0	3.0	2.1	2.5	2.8	2.8	2.3	2.7	2.5	2.5			
27.0	2.8	1.9	2.3	2.5	2.6	2.1	2.5	2.3	2.3			
28.0	2.6	1.7	2.1	2.4	2.4	1.8	2.3	2.1	2.1			
29.0	2.4	1.5	1.9	2.2	2.2	1.7	2.1	1.8	1.9			
30.0	2.2	1.4	1.7	2.0	2.1	1.6	1.9	1.7	1.7			
31.0	2.1	1.2	1.6	1.8	1.9	1.4	1.8	1.6	1.6			
32.0	1.9	1.1	1.4	1.6	1.8	1.2	1.6	1.4	1.4			
33.0		0.9	1.3	1.5	1.6	1.1	1.5	1.3	1.3			
34.0		0.8	1.2	1.4	1.5	1.0	1.4	1.2	1.2			
35.0		0.7	1.0	1.3	1.4	0.8	1.2	1.0	1.0			
36.0						0.7	1.1	0.9	0.9			
37.0							1.0	0.8	0.8			
38.0							0.9	0.7	0.7			
39.0							0.8					
40.0												
n	1	1	1	1	1	1	1	1	1			
% 2#	0	92	46	46	0	92	46	92	100			
% 3#	46	92	92	46	92	92	92	92	100			
% 4#	92	92	92	92	92	92	92	92	100			
% 5#	92	46	92	92	92	92	92	92	100			
% 6#	92	46	46	92	92	46	92	92	100			
m/s	11.1	11.1	11.1	11.1	11.1	11.1	11.1	11.1	11.1			

TN

T N unit：t

360° 100% 10 t

m	10.7	14.4	14.3	14.2	18.0	17.9	17.8	17.7	21.7	21.4	21.2	25.3
3.0	4.8											
3.5	4.8	4.8	4.8	4.8								
4.0	4.8	4.8	4.8	4.8	4.8	4.8	4.8	4.8				
4.5	4.8	4.8	4.8	4.8	4.8	4.8	4.8	4.8	4.8	4.8	4.8	
5.0	4.8	4.8	4.8	4.8	4.8	4.8	4.8	4.8	4.8	4.8	4.8	
6.0	4.8	4.8	4.8	4.8	4.8	4.8	4.8	4.8	4.8	4.8	4.8	4.8
7.0	4.8	4.8	4.8	4.8	4.8	4.8	4.8	4.8	4.8	4.8	4.8	4.8
8.0		4.8	4.8	4.8	4.8	4.8	4.8	4.8	4.8	4.8	4.8	4.8
9.0		4.8	4.8	4.8	4.8	4.8	4.8	4.8	4.8	4.8	4.8	4.8
10.0		4.8	4.8	4.8	4.8	4.8	4.8	4.8	4.8	4.8	4.8	4.8
11.0		4.8	4.8	4.8	4.8	4.8	4.8	4.8	4.8	4.8	4.8	4.8
12.0					4.8	4.8	4.8	4.8	4.8	4.8	4.8	4.8
13.0					4.8	4.8	4.8	4.8	4.8	4.8	4.8	4.8
14.0					4.8	4.8	4.8	4.8	4.8	4.8	4.8	4.8
15.0									4.8	4.8	4.8	4.8
16.0									4.3	4.8	4.8	4.7
17.0									3.7	4.8	4.5	4.2
18.0									3.2	4.4	4.0	3.7
19.0												3.2
20.0												2.8
21.0												2.5
22.0												
23.0												
24.0												
25.0												
26.0												
27.0												
28.0												
29.0												
30.0												
31.0												
32.0												
33.0												
34.0												
C_n	1	1	1	1	1	1	1	1	1	1	1	1
% 2#	0	0	0	0	0	0	0	0	46	0	0	46
% 3#	0	46	0	0	46	0	0	0	46	0	0	46
% 4#	0	0	0	0	46	46	0	0	46	46	0	46
% 5#	0	0	46	0	0	46	46	0	0	46	46	46
% 6#	0	0	0	46	0	0	46	92	0	46	92	0
m/s	14.3	14.3	14.3	14.3	14.3	14.3	14.3	14.3	12.8	12.8	12.8	12.8

TN

T	N

unit：t

360°	100%	10 t

m	25.1	24.9	24.8	28.8	28.6	28.5	32.4	32.2	32.1	32.1	36.1	35.8
6.0	4.8	4.8	4.8	4.8	4.8	4.8	4.8	4.8	4.8	4.8		
7.0	4.8	4.8	4.8	4.8	4.8	4.8	4.8	4.8	4.8	4.8	4.8	4.8
8.0	4.8	4.8	4.8	4.8	4.8	4.8	4.8	4.8	4.8	4.8	4.8	4.8
9.0	4.8	4.8	4.8	4.8	4.8	4.8	4.8	4.8	4.8	4.8	4.8	4.8
10.0	4.8	4.8	4.8	4.8	4.8	4.8	4.8	4.8	4.8	4.8	4.8	4.8
11.0	4.8	4.8	4.8	4.8	4.8	4.8	4.8	4.8	4.8	4.8	4.8	4.8
12.0	4.8	4.8	4.8	4.8	4.8	4.8	4.8	4.8	4.8	4.8	4.8	4.8
13.0	4.8	4.8	4.8	4.8	4.8	4.8	4.8	4.8	4.8	4.8	4.8	4.8
14.0	4.8	4.8	4.8	4.8	4.8	4.8	4.8	4.8	4.8	4.8	4.8	4.8
15.0	4.8	4.8	4.8	4.8	4.8	4.8	4.8	4.8	4.8	4.8	4.8	4.8
16.0	4.8	4.8	4.8	4.8	4.8	4.8	4.8	4.8	4.8	4.8	4.8	4.8
17.0	4.8	4.8	4.5	4.6	4.8	4.8	4.2	4.8	4.8	4.8	4.2	4.8
18.0	4.3	4.7	4.2	4.1	4.6	4.8	3.8	4.3	4.8	4.8	3.7	4.5
19.0	3.9	4.3	4.0	3.6	4.2	4.5	3.3	3.9	4.3	4.4	3.3	4.1
20.0	3.5	3.9	3.8	3.3	3.8	4.1	3.0	3.5	3.9	3.9	3.0	3.7
21.0	3.2	3.6	3.6	2.9	3.5	3.7	2.6	3.2	3.6	3.6	2.6	3.4
22.0				2.6	3.1	3.4	2.3	2.9	3.3	3.3	2.3	3.0
23.0				2.3	2.9	3.2	2.0	2.6	3.0	3.1	2.0	2.8
24.0				2.1	2.6	2.9	1.7	2.4	2.7	2.8	1.7	2.5
25.0				1.8	2.4	2.6	1.6	2.1	2.5	2.6	1.6	2.3
26.0							1.3	1.9	2.3	2.3	1.3	2.1
27.0							1.2	1.7	2.1	2.2	1.2	1.9
28.0							1.0	1.6	1.9	2.0	1.0	1.7
29.0											0.9	1.5
30.0											0.7	1.3
31.0												1.2
32.0												1.1
33.0												
34.0												
35.0												
n	1	1	1	1	1	1	1	1	1	1	1	1
% 2#	0	0	0	46	0	0	92	46	0	0	92	46
% 3#	46	0	0	46	46	0	46	46	46	0	92	46
% 4#	46	46	0	46	46	46	46	46	46	92	46	46
% 5#	46	46	92	46	46	92	46	46	92	92	46	92
% 6#	46	92	92	46	92	92	46	92	92	92	46	92
m/s	12.8	12.8	12.8	12.8	12.8	12.8	11.1	11.1	11.1	11.1	11.1	11.1

TN

T N unit：t

360° 100% 10 t

m / m	35.7	39.7	39.6	39.4	39.4	43.3	43.1	46.8	50.0			
7.0	4.8											
8.0	4.8	4.8	4.8	4.8	4.8							
9.0	4.8	4.8	4.8	4.8	4.8	4.8	4.8	4.8				
10.0	4.8	4.8	4.8	4.8	4.8	4.8	4.8	4.8	4.8			
11.0	4.8	4.8	4.8	4.8	4.8	4.8	4.8	4.8	4.8			
12.0	4.8	4.8	4.8	4.8	4.8	4.8	4.8	4.8	4.8			
13.0	4.8	4.8	4.8	4.8	4.8	4.8	4.8	4.8	4.8			
14.0	4.8	4.8	4.8	4.8	4.8	4.8	4.8	4.8	4.8			
15.0	4.8	4.8	4.8	4.8	4.8	4.8	4.8	4.8	4.8			
16.0	4.8	4.8	4.8	4.8	4.8	4.8	4.8	4.8	4.8			
17.0	4.8	4.3	4.8	4.8	4.8	4.5	4.8	4.7	4.7			
18.0	4.8	3.9	4.3	4.5	4.6	4.0	4.5	4.2	4.2			
19.0	4.3	3.4	3.8	4.1	4.2	3.6	4.0	3.8	3.8			
20.0	3.9	3.1	3.4	3.7	3.8	3.2	3.7	3.4	3.4			
21.0	3.6	2.7	3.1	3.4	3.4	2.9	3.3	3.0	3.1			
22.0	3.3	2.4	2.8	3.0	3.1	2.6	3.0	2.7	2.7			
23.0	3.0	2.1	2.5	2.8	2.8	2.3	2.7	2.5	2.5			
24.0	2.7	1.9	2.3	2.5	2.6	2.0	2.5	2.3	2.3			
25.0	2.5	1.6	2.1	2.3	2.4	1.8	2.3	2.0	2.1			
26.0	2.3	1.5	1.8	2.1	2.2	1.6	2.0	1.8	1.8			
27.0	2.1	1.3	1.6	1.9	2.0	1.4	1.8	1.6	1.6			
28.0	1.9	1.1	1.4	1.7	1.7	1.2	1.6	1.4	1.4			
29.0	1.8	0.9	1.3	1.6	1.6	1.1	1.5	1.3	1.3			
30.0	1.6	0.8	1.1	1.4	1.5	1.0	1.3	1.1	1.1			
31.0	1.5	0.7	1.0	1.3	1.3	0.8	1.2	1.0	1.0			
32.0	1.4		0.9	1.2	1.2	0.7	1.1	0.9	0.9			
33.0			0.8	1.0	1.1		1.0	0.8	0.8			
34.0			0.7	0.9	1.0		0.8	0.7	0.7			
35.0				0.8	0.8		0.7					
n	1	1	1	1	1	1	1	1	1			
% 2#	0	92	46	46	0	92	46	92	100			
% 3#	46	92	92	46	92	92	92	92	100			
% 4#	92	92	92	92	92	92	92	92	100			
% 5#	92	46	92	92	92	92	92	92	100			
% 6#	92	46	46	92	92	46	92	92	100			
m/s	11.1	11.1	11.1	11.1	11.1	11.1	11.1	11.1	11.1			

TN

T	N

unit：t

360°	100%	6.5 t

m	10.7	14.4	14.3	14.2	18.0	17.9	17.8	17.7	21.7	21.4	21.2	25.3
3.0	4.8											
3.5	4.8	4.8	4.8	4.8								
4.0	4.8	4.8	4.8	4.8	4.8	4.8	4.8	4.8				
4.5	4.8	4.8	4.8	4.8	4.8	4.8	4.8	4.8	4.8	4.8	4.8	
5.0	4.8	4.8	4.8	4.8	4.8	4.8	4.8	4.8	4.8	4.8	4.8	
6.0	4.8	4.8	4.8	4.8	4.8	4.8	4.8	4.8	4.8	4.8	4.8	4.8
7.0	4.8	4.8	4.8	4.8	4.8	4.8	4.8	4.8	4.8	4.8	4.8	4.8
8.0		4.8	4.8	4.8	4.8	4.8	4.8	4.8	4.8	4.8	4.8	4.8
9.0		4.8	4.8	4.8	4.8	4.8	4.8	4.8	4.8	4.8	4.8	4.8
10.0		4.8	4.8	4.8	4.8	4.8	4.8	4.8	4.8	4.8	4.8	4.8
11.0		4.8	4.8	4.8	4.8	4.8	4.8	4.8	4.8	4.8	4.8	4.8
12.0					4.8	4.8	4.8	4.8	4.8	4.8	4.8	4.8
13.0					4.8	4.8	4.8	4.8	4.8	4.8	4.8	4.8
14.0					4.7	4.8	4.8	4.8	4.5	4.8	4.8	4.8
15.0									3.8	4.8	4.8	4.2
16.0									3.3	4.4	4.8	3.6
17.0									2.8	3.9	4.3	3.2
18.0									2.4	3.6	3.8	2.8
19.0												2.4
20.0												2.0
21.0												1.8
22.0												
23.0												
24.0												
25.0												
26.0												
27.0												
28.0												
29.0												
30.0												
31.0												
32.0												
n	1	1	1	1	1	1	1	1	1	1	1	1
% 2#	0	0	0	0	0	0	0	0	46	0	0	46
% 3#	0	46	0	0	46	0	0	0	46	0	0	46
% 4#	0	0	0	0	46	46	0	0	46	46	0	46
% 5#	0	0	46	0	0	46	46	0	0	46	46	46
% 6#	0	0	0	46	0	0	46	92	0	46	92	0
m/s	14.3	14.3	14.3	14.3	14.3	14.3	14.3	14.3	12.8	12.8	12.8	12.8

TN

T N unit：t

360° 100% 6.5 t

m	25.1	24.9	24.8	28.8	28.6	28.5	32.4	32.2	32.1	32.1	36.1	35.8
6.0	4.8	4.8	4.8	4.8	4.8	4.8	4.8	4.8	4.8	4.8		
7.0	4.8	4.8	4.8	4.8	4.8	4.8	4.8	4.8	4.8	4.8	4.8	4.8
8.0	4.8	4.8	4.8	4.8	4.8	4.8	4.8	4.8	4.8	4.8	4.8	4.8
9.0	4.8	4.8	4.8	4.8	4.8	4.8	4.8	4.8	4.8	4.8	4.8	4.8
10.0	4.8	4.8	4.8	4.8	4.8	4.8	4.8	4.8	4.8	4.8	4.8	4.8
11.0	4.8	4.8	4.8	4.8	4.8	4.8	4.8	4.8	4.8	4.8	4.8	4.8
12.0	4.8	4.8	4.8	4.8	4.8	4.8	4.8	4.8	4.8	4.8	4.8	4.8
13.0	4.8	4.8	4.8	4.8	4.8	4.8	4.8	4.8	4.8	4.8	4.8	4.8
14.0	4.8	4.8	4.8	4.8	4.8	4.8	4.8	4.8	4.8	4.8	4.8	4.8
15.0	4.8	4.8	4.8	4.6	4.8	4.8	4.3	4.8	4.8	4.8	4.3	4.8
16.0	4.5	4.8	4.8	4.1	4.6	4.8	3.7	4.3	4.8	4.8	3.8	4.5
17.0	4.1	4.3	4.3	3.6	4.2	4.5	3.2	3.9	4.3	4.4	3.2	4.0
18.0	3.6	3.8	4.0	3.1	3.7	4.0	2.8	3.4	3.8	3.9	2.8	3.6
19.0	3.3	3.5	3.5	2.8	3.4	3.6	2.5	3.1	3.5	3.5	2.5	3.2
20.0	2.8	3.2	3.2	2.5	3.0	3.3	2.2	2.7	3.2	3.2	2.1	2.9
21.0	2.5	2.8	2.9	2.2	2.7	3.0	1.8	2.4	2.8	2.9	1.8	2.6
22.0				1.9	2.4	2.7	1.6	2.2	2.6	2.6	1.5	2.3
23.0				1.6	2.2	2.5	1.4	1.9	2.3	2.4	1.4	2.1
24.0				1.5	2.0	2.2	1.2	1.7	2.1	2.2	1.2	1.8
25.0				1.2	1.7	2.1	1.0	1.5	1.9	2.0	1.0	1.7
26.0							0.8	1.3	1.7	1.8	0.8	1.4
27.0								1.2	1.5	1.6		1.3
28.0								1.0	1.4	1.5		1.1
29.0												1.0
30.0												0.9
31.0												0.8
32.0												0.7
n	1	1	1	1	1	1	1	1	1	1	1	1
% 2#	0	0	0	46	0	0	92	46	0	0	92	46
% 3#	46	0	0	46	46	0	46	46	46	0	92	46
% 4#	46	46	0	46	46	46	46	46	46	92	46	46
% 5#	46	46	92	46	46	92	46	46	92	92	46	92
% 6#	46	92	92	46	92	92	46	92	92	92	46	92
m/s	12.8	12.8	12.8	12.8	12.8	12.8	11.1	11.1	11.1	11.1	11.1	11.1

TN

T	N

unit：t

360°	100%	6.5 t

m / m	35.7	39.7	39.6	39.4	39.4	43.3	43.1	46.8	50.0			
7.0	4.8											
8.0	4.8	4.8	4.8	4.8	4.8							
9.0	4.8	4.8	4.8	4.8	4.8	4.8	4.8	4.8				
10.0	4.8	4.8	4.8	4.8	4.8	4.8	4.8	4.8	4.8			
11.0	4.8	4.8	4.8	4.8	4.8	4.8	4.8	4.8	4.8			
12.0	4.8	4.8	4.8	4.8	4.8	4.8	4.8	4.8	4.8			
13.0	4.8	4.8	4.8	4.8	4.8	4.8	4.8	4.8	4.8			
14.0	4.8	4.8	4.8	4.8	4.8	4.8	4.8	4.8	4.8			
15.0	4.8	4.4	4.8	4.8	4.8	4.6	4.8	4.8	4.8			
16.0	4.8	3.8	4.3	4.5	4.7	4.1	4.5	4.2	4.3			
17.0	4.3	3.4	3.8	4.0	4.2	3.5	4.0	3.8	3.8			
18.0	3.9	3.0	3.3	3.6	3.7	3.1	3.5	3.3	3.3			
19.0	3.5	2.5	2.9	3.2	3.3	2.7	3.2	2.9	2.9			
20.0	3.2	2.2	2.6	2.9	3.0	2.4	2.8	2.6	2.6			
21.0	2.8	1.9	2.3	2.6	2.6	2.1	2.5	2.3	2.3			
22.0	2.6	1.6	2.1	2.4	2.4	1.8	2.3	2.0	2.1			
23.0	2.3	1.4	1.8	2.1	2.2	1.6	2.0	1.8	1.8			
24.0	2.1	1.3	1.6	1.8	2.0	1.4	1.8	1.6	1.6			
25.0	1.9	1.0	1.4	1.7	1.7	1.2	1.6	1.4	1.4			
26.0	1.7	0.9	1.2	1.5	1.6	1.0	1.4	1.2	1.2			
27.0	1.5	0.7	1.1	1.3	1.4	0.9	1.3	1.1	1.0			
28.0	1.4		0.9	1.2	1.2	0.7	1.1	0.9	0.9			
29.0	1.2		0.8	1.0	1.1		0.9	0.7	0.8			
30.0	1.1			0.9	1.0		0.9		0.7			
31.0	1.0			0.8	0.9		0.7					
32.0	0.9			0.7	0.7							
n	1	1	1	1	1	1	1	1	1			
% 2#	0	92	46	46	0	92	46	92	100			
% 3#	46	92	92	46	92	92	92	92	100			
% 4#	92	92	92	92	92	92	92	92	100			
% 5#	92	46	92	92	92	92	92	92	100			
% 6#	92	46	46	92	92	46	92	92	100			
m/s	11.1	11.1	11.1	11.1	11.1	11.1	11.1	11.1	11.1			

TN

T N unit：t

360° 100% 4.2 t

m / m	10.7	14.4	14.3	14.2	18.0	17.9	17.8	17.7	21.7	21.4	21.2	25.3
3.0	4.8											
3.5	4.8	4.8	4.8	4.8								
4.0	4.8	4.8	4.8	4.8	4.8	4.8	4.8	4.8				
4.5	4.8	4.8	4.8	4.8	4.8	4.8	4.8	4.8	4.8	4.8	4.8	
5.0	4.8	4.8	4.8	4.8	4.8	4.8	4.8	4.8	4.8	4.8	4.8	
6.0	4.8	4.8	4.8	4.8	4.8	4.8	4.8	4.8	4.8	4.8	4.8	4.8
7.0	4.8	4.8	4.8	4.8	4.8	4.8	4.8	4.8	4.8	4.8	4.8	4.8
8.0		4.8	4.8	4.8	4.8	4.8	4.8	4.8	4.8	4.8	4.8	4.8
9.0		4.8	4.8	4.8	4.8	4.8	4.8	4.8	4.8	4.8	4.8	4.8
10.0		4.8	4.8	4.8	4.8	4.8	4.8	4.8	4.8	4.8	4.8	4.8
11.0		4.8	4.8	4.8	4.8	4.8	4.8	4.8	4.8	4.8	4.8	4.8
12.0					4.8	4.8	4.8	4.8	4.8	4.8	4.8	4.8
13.0					4.2	4.7	4.8	4.8	3.9	4.8	4.8	4.4
14.0					3.5	4.0	4.5	4.8	3.3	4.5	4.8	3.7
15.0									2.7	4.0	4.3	3.1
16.0									2.2	3.4	3.8	2.7
17.0									1.8	3.0	3.4	2.3
18.0									1.5	2.7	3.0	1.9
19.0												1.6
20.0												1.3
21.0												1.1
22.0												
23.0												
24.0												
25.0												
26.0												
27.0												
28.0												
29.0												
30.0												
31.0												
n	1	1	1	1	1	1	1	1	1	1	1	1
% 2#	0	0	0	0	0	0	0	0	46	0	0	46
% 3#	0	46	0	0	46	0	0	0	46	0	0	46
% 4#	0	0	0	0	46	46	0	0	46	46	0	46
% 5#	0	0	46	0	0	46	46	0	0	46	46	46
% 6#	0	0	0	46	0	0	46	92	0	46	92	0
m/s	14.3	14.3	14.3	14.3	14.3	14.3	14.3	14.3	12.8	12.8	12.8	12.8

TN

T N unit：t

360° 100% 4.2 t

m	25.1	24.9	24.8	28.8	28.6	28.5	32.4	32.2	32.1	32.1	36.1	35.8
6.0	4.8	4.8	4.8	4.8	4.8	4.8	4.8	4.8	4.8	4.8		
7.0	4.8	4.8	4.8	4.8	4.8	4.8	4.8	4.8	4.8	4.8	4.8	4.8
8.0	4.8	4.8	4.8	4.8	4.8	4.8	4.8	4.8	4.8	4.8	4.8	4.8
9.0	4.8	4.8	4.8	4.8	4.8	4.8	4.8	4.8	4.8	4.8	4.8	4.8
10.0	4.8	4.8	4.8	4.8	4.8	4.8	4.8	4.8	4.8	4.8	4.8	4.8
11.0	4.8	4.8	4.8	4.8	4.8	4.8	4.8	4.8	4.8	4.8	4.8	4.8
12.0	4.8	4.8	4.8	4.8	4.8	4.8	4.8	4.8	4.8	4.8	4.8	4.8
13.0	4.8	4.8	4.8	4.8	4.8	4.8	4.5	4.8	4.8	4.8	4.5	4.8
14.0	4.4	4.8	4.8	4.1	4.8	4.8	3.8	4.5	4.8	4.8	3.8	4.6
15.0	3.8	4.3	4.4	3.5	4.1	4.5	3.3	3.8	4.3	4.4	3.2	4.0
16.0	3.4	3.8	4.0	3.1	3.7	4.0	2.7	3.4	3.8	3.9	2.8	3.5
17.0	2.9	3.4	3.6	2.6	3.2	3.5	2.4	3.0	3.4	3.4	2.3	3.1
18.0	2.5	3.0	3.2	2.3	2.9	3.1	2.0	2.5	3.0	3.0	1.9	2.7
19.0	2.2	2.7	2.8	2.0	2.5	2.8	1.7	2.3	2.7	2.7	1.6	2.4
20.0	1.9	2.4	2.5	1.7	2.2	2.5	1.4	1.9	2.4	2.4	1.3	2.1
21.0	1.6	2.1	2.2	1.4	2.0	2.2	1.1	1.7	2.1	2.2	1.1	1.8
22.0				1.2	1.7	2.0	0.9	1.5	1.9	1.9	0.9	1.6
23.0				1.0	1.5	1.8	0.7	1.2	1.6	1.7	0.7	1.4
24.0				0.8	1.3	1.6		1.1	1.5	1.5		1.2
25.0					1.1	1.4		0.9	1.3	1.4		1.1
26.0								0.8	1.2	1.2		0.9
27.0									1.0	1.0		0.8
28.0									0.9	0.9		
29.0												
30.0												
31.0												
n	1	1	1	1	1	1	1	1	1	1	1	1
% 2#	0	0	0	46	0	0	92	46	0	0	92	46
% 3#	46	0	0	46	46	0	46	46	46	0	92	46
% 4#	46	46	0	46	46	46	46	46	46	92	46	46
% 5#	46	46	92	46	46	92	46	46	92	92	46	92
% 6#	46	92	92	46	92	92	46	92	92	92	46	92
m/s	12.8	12.8	12.8	12.8	12.8	12.8	11.1	11.1	11.1	11.1	11.1	11.1

TN

T N unit：t

360° 100% 4.2 t

m / m	35.7	39.7	39.6	39.4	39.4	43.3	43.1	46.8	50.0			
7.0	4.8											
8.0	4.8	4.8	4.8	4.8	4.8							
9.0	4.8	4.8	4.8	4.8	4.8	4.8	4.8	4.8				
10.0	4.8	4.8	4.8	4.8	4.8	4.8	4.8	4.8	4.8			
11.0	4.8	4.8	4.8	4.8	4.8	4.8	4.8	4.8	4.8			
12.0	4.8	4.8	4.8	4.8	4.8	4.8	4.8	4.8	4.8			
13.0	4.8	4.6	4.8	4.8	4.8	4.8	4.8	4.8	4.8			
14.0	4.8	3.9	4.4	4.6	4.7	4.1	4.5	4.3	4.3			
15.0	4.3	3.3	3.7	4.1	4.1	3.5	4.0	3.7	3.7			
16.0	3.8	2.8	3.2	3.6	3.6	3.0	3.5	3.2	3.3			
17.0	3.4	2.4	2.8	3.2	3.2	2.6	3.0	2.8	2.8			
18.0	3.0	2.1	2.5	2.7	2.8	2.2	2.6	2.4	2.5			
19.0	2.7	1.7	2.1	2.4	2.5	1.9	2.3	2.1	2.2			
20.0	2.4	1.4	1.9	2.1	2.2	1.6	2.1	1.8	1.8			
21.0	2.1	1.2	1.6	1.9	1.9	1.4	1.8	1.6	1.6			
22.0	1.9	1.0	1.4	1.6	1.7	1.2	1.5	1.3	1.4			
23.0	1.6	0.8	1.2	1.4	1.5	0.9	1.4	1.1	1.2			
24.0	1.5		1.0	1.3	1.3	0.8	1.2	1.0	1.0			
25.0	1.3		0.8	1.1	1.1		1.0	0.8	0.8			
26.0	1.2		0.7	0.9	1.0		0.8	0.7	0.7			
27.0	1.0			0.8	0.9		0.7					
28.0	0.9			0.7	0.7							
29.0	0.7											
30.0												
31.0												
n	1	1	1	1	1	1	1	1	1			
% 2#	0	92	46	46	0	92	46	92	100			
% 3#	46	92	92	46	92	92	92	92	100			
% 4#	92	92	92	92	92	92	92	92	100			
% 5#	92	46	92	92	92	92	92	92	100			
% 6#	92	46	46	92	92	46	92	92	100			
m/s	11.1	11.1	11.1	11.1	11.1	11.1	11.1	11.1	11.1			

TN

T	N

unit：t

360°	100%	3.9 t

m	10.7	14.4	14.3	14.2	18.0	17.9	17.8	17.7	21.7	21.4	21.2	25.3
3.0	4.8											
3.5	4.8	4.8	4.8	4.8								
4.0	4.8	4.8	4.8	4.8	4.8	4.8	4.8	4.8				
4.5	4.8	4.8	4.8	4.8	4.8	4.8	4.8	4.8	4.8	4.8	4.8	
5.0	4.8	4.8	4.8	4.8	4.8	4.8	4.8	4.8	4.8	4.8	4.8	
6.0	4.8	4.8	4.8	4.8	4.8	4.8	4.8	4.8	4.8	4.8	4.8	4.8
7.0	4.8	4.8	4.8	4.8	4.8	4.8	4.8	4.8	4.8	4.8	4.8	4.8
8.0		4.8	4.8	4.8	4.8	4.8	4.8	4.8	4.8	4.8	4.8	4.8
9.0		4.8	4.8	4.8	4.8	4.8	4.8	4.8	4.8	4.8	4.8	4.8
10.0		4.8	4.8	4.8	4.8	4.8	4.8	4.8	4.8	4.8	4.8	4.8
11.0		4.8	0.0	4.8	4.8	4.8	4.8	4.8	4.8	4.8	4.8	4.8
12.0					4.8	4.8	4.8	4.8	4.6	4.8	4.8	4.8
13.0					4.1	4.6	4.8	4.8	3.8	4.8	4.8	4.2
14.0					3.4	3.9	4.3	4.4	3.2	4.4	4.8	3.5
15.0									2.6	3.8	4.2	3.0
16.0									2.2	3.4	3.7	2.5
17.0									1.8	2.9	3.2	2.1
18.0									1.4	2.5	2.9	1.7
19.0												1.5
20.0												1.2
21.0												1.0
22.0												
23.0												
24.0												
25.0												
26.0												
27.0												
28.0												
29.0												
30.0												
31.0												
n	1	1	1	1	1	1	1	1	1	1	1	1
% 2#	0	0	0	0	0	0	0	0	46	0	0	46
% 3#	0	46	0	0	46	0	0	0	46	0	0	46
% 4#	0	0	0	0	46	46	0	0	46	46	0	46
% 5#	0	0	46	0	0	46	46	0	0	46	46	46
% 6#	0	0	0	46	0	0	46	92	0	46	92	0
m/s	14.3	14.3	14.3	14.3	14.3	14.3	14.3	14.3	12.8	12.8	12.8	12.8

TN

T N unit：t

360° 100% 3.9 t

m / m	25.1	24.9	24.8	28.8	28.6	28.5	32.4	32.2	32.1	32.1	36.1	35.8
6.0	4.8	4.8	4.8	4.8	4.8	4.8	4.8	4.8	4.8	4.8		
7.0	4.8	4.8	4.8	4.8	4.8	4.8	4.8	4.8	4.8	4.8	4.8	4.8
8.0	4.8	4.8	4.8	4.8	4.8	4.8	4.8	4.8	4.8	4.8	4.8	4.8
9.0	4.8	4.8	4.8	4.8	4.8	4.8	4.8	4.8	4.8	4.8	4.8	4.8
10.0	4.8	4.8	4.8	4.8	4.8	4.8	4.8	4.8	4.8	4.8	4.8	4.8
11.0	4.8	4.8	4.8	4.8	4.8	4.8	4.8	4.8	4.8	4.8	4.8	4.8
12.0	4.8	4.8	4.8	4.8	4.8	4.8	4.8	4.8	4.8	4.8	4.8	4.8
13.0	4.8	4.8	4.8	4.7	4.8	4.8	4.3	4.8	4.8	4.8	4.3	4.8
14.0	4.3	4.8	4.8	4.0	4.6	4.8	3.7	4.3	4.8	4.8	3.6	4.5
15.0	3.7	4.2	4.2	3.5	4.0	4.3	3.1	3.8	4.2	4.2	3.1	3.9
16.0	3.2	3.7	3.8	2.9	3.5	3.8	2.7	3.2	3.6	3.7	2.6	3.4
17.0	2.8	3.2	3.4	2.5	3.1	3.4	2.2	2.8	3.2	3.4	2.3	3.0
18.0	2.5	2.9	3.0	2.2	2.7	3.0	1.8	2.5	2.9	2.9	1.8	2.6
19.0	2.1	2.6	2.7	1.8	2.5	2.7	1.5	2.2	2.5	2.7	1.6	2.3
20.0	1.9	2.3	2.4	1.6	2.2	2.4	1.3	1.9	2.3	2.3	1.3	2.0
21.0	1.6	2.0	2.1	1.3	1.8	2.2	1.1	1.6	2.0	2.1	1.0	1.8
22.0				1.1	1.7	1.9	0.8	1.4	1.8	1.9	0.8	1.5
23.0				0.9	1.4	1.8	0.7	1.2	1.6	1.6		1.4
24.0				0.7	1.3	1.5		1.0	1.4	1.5		1.2
25.0					1.1	1.4		0.9	1.2	1.3		1.0
26.0								0.7	1.1	1.2		0.8
27.0									1.0	1.0		0.7
28.0									0.8	0.9		
29.0												
30.0												
31.0												
n	1	1	1	1	1	1	1	1	1	1	1	1
% 2#	0	0	0	46	0	0	92	46	0	0	92	46
% 3#	46	0	0	46	46	0	46	46	46	0	92	46
% 4#	46	46	0	46	46	46	46	46	46	92	46	46
% 5#	46	46	92	46	46	92	46	46	92	92	46	92
% 6#	46	92	92	46	92	92	46	92	92	92	46	92
m/s	12.8	12.8	12.8	12.8	12.8	12.8	11.1	11.1	11.1	11.1	11.1	11.1

TN

T	N

unit：t

360°	100%	3.9 t

m / m	35.7	39.7	39.6	39.4	39.4	43.3	43.1	46.8	50.0			
7.0	4.8											
8.0	4.8	4.8	4.8	4.8	4.8							
9.0	4.8	4.8	4.8	4.8	4.8	4.8	4.8	4.8				
10.0	4.8	4.8	4.8	4.8	4.8	4.8	4.8	4.8	4.8			
11.0	4.8	4.8	4.8	4.8	4.8	4.8	4.8	4.8	4.8			
12.0	4.8	4.8	4.8	4.8	4.8	4.8	4.8	4.8	4.8			
13.0	4.8	4.4	4.8	4.8	4.8	4.6	4.8	4.8	4.8			
14.0	4.8	3.8	4.2	4.5	4.6	3.9	4.4	4.2	4.2			
15.0	4.2	3.2	3.6	3.9	4.0	3.4	3.9	3.6	3.7			
16.0	3.7	2.7	3.2	3.4	3.5	2.9	3.3	3.1	3.1			
17.0	3.3	2.3	2.8	3.0	3.1	2.5	2.9	2.7	2.7			
18.0	2.9	1.9	2.4	2.7	2.7	2.2	2.6	2.4	2.4			
19.0	2.5	1.6	2.1	2.3	2.4	1.8	2.3	2.0	2.0			
20.0	2.3	1.4	1.7	2.1	2.1	1.5	2.0	1.8	1.7			
21.0	2.0	1.2	1.6	1.8	1.9	1.3	1.7	1.5	1.5			
22.0	1.8	0.9	1.3	1.6	1.6	1.1	1.5	1.3	1.3			
23.0	1.6	0.7	1.1	1.4	1.4	0.9	1.3	1.1	1.1			
24.0	1.4		0.9	1.2	1.3	0.7	1.1	0.9	0.9			
25.0	1.2		0.8	1.0	1.1		0.9	0.7	0.8			
26.0	1.1			0.9	0.9		0.8					
27.0	1.0			0.7	0.8		0.7					
28.0	0.8				0.7							
29.0	0.7											
30.0												
31.0												
n	1	1	1	1	1	1	1	1	1			
% 2#	0	92	46	46	0	92	46	92	100			
% 3#	46	92	92	46	92	92	92	92	100			
% 4#	92	92	92	92	92	92	92	92	100			
% 5#	92	46	92	92	92	92	92	92	100			
% 6#	92	46	46	92	92	46	92	92	100			
m/s	11.1	11.1	11.1	11.1	11.1	11.1	11.1	11.1	11.1			

TN

T N unit：t

360° 50% 13 t

m / m	10.7	14.4	14.3	14.2	18.0	17.9	17.8	17.7	21.7	21.4	21.2	25.3
3.0	4.8											
3.5	4.8	4.8	4.8	4.8								
4.0	4.8	4.8	4.8	4.8	4.8	4.8	4.8	4.8				
4.5	4.8	4.8	4.8	4.8	4.8	4.8	4.8	4.8	4.8	4.8	4.8	
5.0	4.8	4.8	4.8	4.8	4.8	4.8	4.8	4.8	4.8	4.8	4.8	
6.0	4.8	4.8	4.8	4.8	4.8	4.8	4.8	4.8	4.8	4.8	4.8	4.8
7.0	4.8	4.8	4.8	4.8	4.8	4.8	4.8	4.8	4.8	4.8	4.8	4.8
8.0		4.8	4.8	4.8	4.8	4.8	4.8	4.8	4.8	4.8	4.8	4.8
9.0		4.8	4.8	4.8	4.8	4.8	4.8	4.8	4.8	4.8	4.8	4.8
10.0		4.8	4.8	4.8	4.8	4.8	4.8	4.8	4.8	4.8	4.8	4.8
11.0		4.8		4.8	4.8	4.8	4.8	4.8	4.8	4.8	4.8	4.8
12.0					4.8	4.8	4.8	4.8	4.8	4.8	4.8	4.8
13.0					4.8	4.8	4.8	4.8	4.8	4.8	4.8	4.8
14.0					3.9	4.4	4.8	4.8	4.3	4.8	4.8	4.7
15.0									3.6	4.8	4.8	4.1
16.0									3.2	4.3	4.5	3.6
17.0									2.8	3.9	4.0	3.1
18.0									1.9	3.0	3.3	2.8
19.0												2.4
20.0												2.2
21.0												1.4
22.0												
23.0												
24.0												
25.0												
26.0												
27.0												
28.0												
29.0												
30.0												
31.0												
32.0												
33.0												
34.0												
C_n	1	1	1	1	1	1	1	1	1	1	1	1
% 2#	0	0	0	0	0	0	0	0	46	0	0	46
% 3#	0	46	0	0	46	0	0	0	46	0	0	46
% 4#	0	0	0	0	46	46	0	0	46	46	0	46
% 5#	0	0	46	0	0	46	46	0	0	46	46	46
% 6#	0	0	0	46	0	0	46	92	0	46	92	0
m/s	14.3	14.3	14.3	14.3	14.3	14.3	14.3	14.3	12.8	12.8	12.8	12.8

TN

T	N

unit：t

360°	50%	13 t

m	25.1	24.9	24.8	28.8	28.6	28.5	32.4	32.2	32.1	32.1	36.1	35.8
6.0	4.8	4.8	4.8	4.8	4.8	4.8	4.8	4.8	4.8	4.8		
7.0	4.8	4.8	4.8	4.8	4.8	4.8	4.8	4.8	4.8	4.8	4.8	4.8
8.0	4.8	4.8	4.8	4.8	4.8	4.8	4.8	4.8	4.8	4.8	4.8	4.8
9.0	4.8	4.8	4.8	4.8	4.8	4.8	4.8	4.8	4.8	4.8	4.8	4.8
10.0	4.8	4.8	4.8	4.8	4.8	4.8	4.8	4.8	4.8	4.8	4.8	4.8
11.0	4.8	4.8	4.8	4.8	4.8	4.8	4.8	4.8	4.8	4.8	4.8	4.8
12.0	4.8	4.8	4.8	4.8	4.8	4.8	4.8	4.8	4.8	4.8	4.8	4.8
13.0	4.8	4.8	4.8	4.8	4.8	4.8	4.8	4.8	4.8	4.8	4.8	4.8
14.0	4.8	4.8	4.8	4.8	4.8	4.8	4.7	4.8	4.8	4.8	4.7	4.8
15.0	4.7	4.8	4.8	4.5	4.8	4.8	4.1	4.7	4.8	4.8	4.1	4.8
16.0	4.2	4.7	4.7	3.9	4.5	4.8	3.7	4.3	4.7	4.7	3.6	4.4
17.0	3.7	4.2	4.3	3.5	4.1	4.4	3.2	3.8	4.2	4.3	3.3	3.9
18.0	3.4	3.9	3.9	3.2	3.6	4.0	2.8	3.4	3.9	3.9	2.9	3.6
19.0	3.1	3.4	3.5	2.8	3.3	3.6	2.5	3.1	3.4	3.5	2.5	3.2
20.0	2.8	3.2	3.2	2.5	3.0	3.3	2.3	2.8	3.1	3.2	2.3	2.9
21.0	2.0	2.5	2.5	2.2	2.8	3.0	2.0	2.5	2.9	2.9	1.9	2.7
22.0				2.0	2.5	2.8	1.7	2.2	2.6	2.7	1.7	2.4
23.0				1.8	2.3	2.6	1.5	2.0	2.4	2.5	1.5	2.2
24.0				1.6	2.1	2.4	1.3	1.8	2.2	2.3	1.3	1.9
25.0				1.0	1.4	1.7	1.1	1.6	2.0	2.1	1.1	1.7
26.0							1.0	1.5	1.8	1.9	1.0	1.6
27.0							0.8	1.3	1.6	1.7	0.8	1.4
28.0								0.8	1.1	1.2		1.3
29.0												1.2
30.0												1.0
31.0												0.9
32.0												
33.0												
34.0												
35.0												
n	1	1	1	1	1	1	1	1	1	1	1	1
% 2#	0	0	0	46	0	0	92	46	0	0	92	46
% 3#	46	0	0	46	46	0	46	46	46	0	92	46
% 4#	46	46	0	46	46	46	46	46	46	92	46	46
% 5#	46	46	92	46	46	92	46	46	92	92	46	92
% 6#	46	92	92	46	92	92	46	92	92	92	46	92
m/s	12.8	12.8	12.8	12.8	12.8	12.8	11.1	11.1	11.1	11.1	11.1	11.1

TN

T	N

unit：t

360°	50%	13 t

m \ m	35.7	39.7	39.6	39.4	39.4	43.3	43.1	46.8	50.0			
7.0	4.8											
8.0	4.8	4.8	4.8	4.8	4.8							
9.0	4.8	4.8	4.8	4.8	4.8	4.8	4.8	4.8				
10.0	4.8	4.8	4.8	4.8	4.8	4.8	4.8	4.8	4.8			
11.0	4.8	4.8	4.8	4.8	4.8	4.8	4.8	4.8	4.8			
12.0	4.8	4.8	4.8	4.8	4.8	4.8	4.8	4.8	4.8			
13.0	4.8	4.8	4.8	4.8	4.8	4.8	4.8	4.8	4.8			
14.0	4.8	4.8	4.8	4.8	4.8	4.8	4.8	4.8	4.8			
15.0	4.8	4.3	4.7	4.8	4.8	4.4	4.8	4.6	4.6			
16.0	4.7	3.7	4.2	4.4	4.5	3.9	4.3	4.1	4.2			
17.0	4.2	3.3	3.7	3.9	4.1	3.5	3.9	3.7	3.7			
18.0	3.9	2.9	3.3	3.6	3.7	3.1	3.5	3.3	3.3			
19.0	3.5	2.6	3.0	3.2	3.3	2.8	3.2	3.0	3.0			
20.0	3.1	2.3	2.7	3.0	3.0	2.5	2.9	2.7	2.7			
21.0	2.9	2.0	2.4	2.7	2.7	2.2	2.6	2.4	2.4			
22.0	2.6	1.8	2.2	2.4	2.5	1.9	2.4	2.2	2.2			
23.0	2.4	1.6	1.9	2.2	2.3	1.7	2.1	2.0	1.9			
24.0	2.2	1.4	1.7	1.9	2.1	1.6	2.0	1.7	1.7			
25.0	2.1	1.2	1.5	1.8	1.8	1.3	1.7	1.5	1.6			
26.0	1.9	1.0	1.4	1.6	1.7	1.2	1.5	1.4	1.4			
27.0	1.6	0.9	1.2	1.5	1.5	1.0	1.4	1.2	1.2			
28.0	1.5	0.7	1.1	1.3	1.4	0.9	1.3	1.1	1.1			
29.0	1.4		0.9	1.2	1.3	0.7	1.1	0.9	0.9			
30.0	1.3		0.8	1.1	1.1		1.0	0.8	0.8			
31.0	1.2		0.7	0.9	1.0		0.9	0.7	0.7			
32.0	0.7			0.8	0.9		0.8					
33.0				0.8	0.8		0.7					
34.0					0.7							
35.0					0.7							
C_n	1	1	1	1	1	1	1	1	1			
% 2#	0	92	46	46	0	92	46	92	100			
% 3#	46	92	92	46	92	92	92	92	100			
% 4#	92	92	92	92	92	92	92	92	100			
% 5#	92	46	92	92	92	92	92	92	100			
% 6#	92	46	46	92	92	46	92	92	100			
m/s	11.1	11.1	11.1	11.1	11.1	11.1	11.1	11.1	11.1			

TN

T	N

unit：t

360°	50%	10 t

m	10.7	14.4	14.3	14.2	18.0	17.9	17.8	17.7	21.7	21.4	21.2	25.3
3.0	4.8											
3.5	4.8	4.8	4.8	4.8								
4.0	4.8	4.8	4.8	4.8	4.8	4.8	4.8	4.8				
4.5	4.8	4.8	4.8	4.8	4.8	4.8	4.8	4.8	4.8	4.8	4.8	
5.0	4.8	4.8	4.8	4.8	4.8	4.8	4.8	4.8	4.8	4.8	4.8	
6.0	4.8	4.8	4.8	4.8	4.8	4.8	4.8	4.8	4.8	4.8	4.8	4.8
7.0	4.8	4.8	4.8	4.8	4.8	4.8	4.8	4.8	4.8	4.8	4.8	4.8
8.0		4.8	4.8	4.8	4.8	4.8	4.8	4.8	4.8	4.8	4.8	4.8
9.0		4.8	4.8	4.8	4.8	4.8	4.8	4.8	4.8	4.8	4.8	4.8
10.0		4.8	4.8	4.8	4.8	4.8	4.8	4.8	4.8	4.8	4.8	4.8
11.0		4.8		4.8	4.8	4.8	4.8	4.8	4.8	4.8	4.8	4.8
12.0					4.8	4.8	4.8	4.8	4.8	4.8	4.8	4.8
13.0					4.6	4.8	4.8	4.8	4.4	4.8	4.8	4.8
14.0					3.9	4.4	4.8	4.8	3.7	4.8	4.8	4.1
15.0									3.2	4.3	4.7	3.5
16.0									2.7	3.8	4.2	3.0
17.0									2.3	3.4	3.7	2.7
18.0									1.9	3.0	3.3	2.3
19.0												1.9
20.0												1.7
21.0												1.4
22.0												
23.0												
24.0												
25.0												
26.0												
27.0												
28.0												
29.0												
30.0												
31.0												
32.0												
n	1	1	1	1	1	1	1	1	1	1	1	1
% 2#	0	0	0	0	0	0	0	0	46	0	0	46
% 3#	0	46	0	0	46	0	0	0	46	0	0	46
% 4#	0	0	0	0	46	46	0	0	46	46	0	46
% 5#	0	0	46	0	0	46	46	0	0	46	46	46
% 6#	0	0	0	46	0	0	46	92	0	46	92	0
m/s	14.3	14.3	14.3	14.3	14.3	14.3	14.3	14.3	12.8	12.8	12.8	12.8

TN

T	N

unit：t

360°	50%	10 t

m	25.1	24.9	24.8	28.8	28.6	28.5	32.4	32.2	32.1	32.1	36.1	35.8
6.0	4.8	4.8	4.8	4.8	4.8	4.8	4.8	4.8	4.8	4.8		
7.0	4.8	4.8	4.8	4.8	4.8	4.8	4.8	4.8	4.8	4.8	4.8	4.8
8.0	4.8	4.8	4.8	4.8	4.8	4.8	4.8	4.8	4.8	4.8	4.8	4.8
9.0	4.8	4.8	4.8	4.8	4.8	4.8	4.8	4.8	4.8	4.8	4.8	4.8
10.0	4.8	4.8	4.8	4.8	4.8	4.8	4.8	4.8	4.8	4.8	4.8	4.8
11.0	4.8	4.8	4.8	4.8	4.8	4.8	4.8	4.8	4.8	4.8	4.8	4.8
12.0	4.8	4.8	4.8	4.8	4.8	4.8	4.8	4.8	4.8	4.8	4.8	4.8
13.0	4.8	4.8	4.8	4.8	4.8	4.8	4.8	4.8	4.8	4.8	4.8	4.8
14.0	4.7	4.8	4.8	4.5	4.8	4.8	4.2	4.8	4.8	4.8	4.2	4.8
15.0	4.2	4.7	4.7	3.9	4.5	4.8	3.6	4.2	4.7	4.7	3.6	4.4
16.0	3.7	4.2	4.2	3.4	3.9	4.3	3.2	3.8	4.1	4.2	3.1	3.9
17.0	3.3	3.7	3.7	3.0	3.5	3.9	2.7	3.3	3.7	3.8	2.7	3.4
18.0	2.9	3.3	3.4	2.6	3.2	3.5	2.4	2.9	3.3	3.3	2.4	3.0
19.0	2.5	3.0	3.0	2.3	2.9	3.1	2.0	2.6	3.0	3.0	2.0	2.8
20.0	2.3	2.7	2.8	2.0	2.6	2.8	1.7	2.3	2.7	2.7	1.7	2.4
21.0	2.0	2.5	2.5	1.7	2.3	2.6	1.5	2.1	2.4	2.5	1.5	2.2
22.0				1.5	2.1	2.3	1.2	1.8	2.2	2.3	1.2	2.0
23.0				1.3	1.9	2.1	1.1	1.6	2.0	2.0	1.1	1.8
24.0				1.1	1.7	1.9	0.9	1.4	1.8	1.8	0.9	1.5
25.0				1.0	1.4	1.7	0.7	1.2	1.6	1.7	0.7	1.3
26.0								1.0	1.4	1.5		1.2
27.0								0.9	1.3	1.3		1.1
28.0								0.8	1.1	1.2		0.9
29.0												0.8
30.0												0.7
31.0												
32.0												
n	1	1	1	1	1	1	1	1	1	1	1	1
% 2#	0	0	0	46	0	0	92	46	0	0	92	46
% 3#	46	0	0	46	46	0	46	46	46	0	92	46
% 4#	46	46	0	46	46	46	46	46	46	92	46	46
% 5#	46	46	92	46	46	92	46	46	92	92	46	92
% 6#	46	92	92	46	92	92	46	92	92	92	46	92
m/s	12.8	12.8	12.8	12.8	12.8	12.8	11.1	11.1	11.1	11.1	11.1	11.1

TN

T	N

unit：t

360°	50%	10 t

m / m	35.7	39.7	39.6	39.4	39.4	43.3	43.1	46.8	50.0			
7.0	4.8											
8.0	4.8	4.8	4.8	4.8	4.8							
9.0	4.8	4.8	4.8	4.8	4.8	4.8	4.8	4.8				
10.0	4.8	4.8	4.8	4.8	4.8	4.8	4.8	4.8	4.8			
11.0	4.8	4.8	4.8	4.8	4.8	4.8	4.8	4.8	4.8			
12.0	4.8	4.8	4.8	4.8	4.8	4.8	4.8	4.8	4.8			
13.0	4.8	4.8	4.8	4.8	4.8	4.8	4.8	4.8	4.8			
14.0	4.8	4.3	4.7	4.8	4.8	4.5	4.8	4.7	4.7			
15.0	4.6	3.7	4.1	4.4	4.5	3.8	4.3	4.1	4.1			
16.0	4.2	3.3	3.6	3.9	4.0	3.4	3.8	3.6	3.7			
17.0	3.7	2.8	3.2	3.4	3.5	3.0	3.4	3.2	3.2			
18.0	3.3	2.4	2.8	3.1	3.2	2.6	3.0	2.8	2.8			
19.0	3.0	2.1	2.5	2.8	2.8	2.3	2.7	2.5	2.5			
20.0	2.7	1.8	2.2	2.5	2.5	2.0	2.4	2.2	2.2			
21.0	2.4	1.6	2.0	2.2	2.3	1.7	2.1	1.9	2.0			
22.0	2.2	1.3	1.7	1.9	2.0	1.5	1.9	1.7	1.7			
23.0	2.0	1.1	1.5	1.8	1.8	1.3	1.7	1.4	1.5			
24.0	1.8	0.9	1.3	1.6	1.6	1.1	1.5	1.3	1.3			
25.0	1.6	0.8	1.1	1.4	1.4	0.9	1.3	1.1	1.1			
26.0	1.4		1.0	1.2	1.3	0.8	1.2	0.9	1.0			
27.0	1.3		0.8	1.1	1.1		1.0	0.8	0.8			
28.0	1.1		0.7	0.9	1.0		0.9	0.7	0.7			
29.0	1.0			0.8	0.9		0.8					
30.0	0.9			0.7	0.8							
31.0	0.8											
32.0	0.7											
n	1	1	1	1	1	1	1	1	1			
% 2#	0	92	46	46	0	92	46	92	100			
% 3#	46	92	92	46	92	92	92	92	100			
% 4#	92	92	92	92	92	92	92	92	100			
% 5#	92	46	92	92	92	92	92	92	100			
% 6#	92	46	46	92	92	46	92	92	100			
m/s	11.1	11.1	11.1	11.1	11.1	11.1	11.1	11.1	11.1			

TN

T	N

unit：t

360°	50%	6.5 t

m	10.7	14.4	14.3	14.2	18.0	17.9	17.8	17.7	21.7	21.4	21.2	25.3
3.0	4.8											
3.5	4.8	4.8	4.8	4.8								
4.0	4.8	4.8	4.8	4.8	4.8	4.8	4.8	4.8				
4.5	4.8	4.8	4.8	4.8	4.8	4.8	4.8	4.8	4.8	4.8	4.8	
5.0	4.8	4.8	4.8	4.8	4.8	4.8	4.8	4.8	4.8	4.8	4.8	
6.0	4.8	4.8	4.8	4.8	4.8	4.8	4.8	4.8	4.8	4.8	4.8	4.8
7.0	4.8	4.8	4.8	4.8	4.8	4.8	4.8	4.8	4.8	4.8	4.8	4.8
8.0		4.8	4.8	4.8	4.8	4.8	4.8	4.8	4.8	4.8	4.8	4.8
9.0		4.8	4.8	4.8	4.8	4.8	4.8	4.8	4.8	4.8	4.8	4.8
10.0		4.8	4.8	4.8	4.8	4.8	4.8	4.8	4.8	4.8	4.8	4.8
11.0		4.7		4.8	4.8	4.8	4.8	4.8	4.8	4.8	4.8	4.8
12.0					4.2	4.7	4.8	4.8	3.9	4.8	4.8	4.4
13.0					3.5	4.0	4.4	4.4	3.3	4.5	4.8	3.6
14.0					2.9	3.4	3.8	3.8	2.7	3.9	4.2	3.1
15.0									2.2	3.4	3.7	2.6
16.0									1.8	2.9	3.3	2.2
17.0									1.4	2.6	2.9	1.8
18.0									1.1	2.3	2.6	1.5
19.0												1.2
20.0												1.0
21.0												0.8
22.0												
23.0												
24.0												
25.0												
26.0												
27.0												
28.0												
29.0												
n	1	1	1	1	1	1	1	1	1	1	1	1
% 2#	0	0	0	0	0	0	0	0	46	0	0	46
% 3#	0	46	0	0	46	0	0	0	46	0	0	46
% 4#	0	0	0	0	46	46	0	0	46	46	0	46
% 5#	0	0	46	0	0	46	46	0	0	46	46	46
% 6#	0	0	0	46	0	0	46	92	0	46	92	0
m/s	14.3	14.3	14.3	14.3	14.3	14.3	14.3	14.3	12.8	12.8	12.8	12.8

TN

T	N

unit：t

360°	50%	6.5 t

m	25.1	24.9	24.8	28.8	28.6	28.5	32.4	32.2	32.1	32.1	36.1	35.8
6.0	4.8	4.8	4.8	4.8	4.8	4.8	4.8	4.8	4.8	4.8		
7.0	4.8	4.8	4.8	4.8	4.8	4.8	4.8	4.8	4.8	4.8	4.8	4.8
8.0	4.8	4.8	4.8	4.8	4.8	4.8	4.8	4.8	4.8	4.8	4.8	4.8
9.0	4.8	4.8	4.8	4.8	4.8	4.8	4.8	4.8	4.8	4.8	4.8	4.8
10.0	4.8	4.8	4.8	4.8	4.8	4.8	4.8	4.8	4.8	4.8	4.8	4.8
11.0	4.8	4.8	4.8	4.8	4.8	4.8	4.8	4.8	4.8	4.8	4.8	4.8
12.0	4.8	4.8	4.8	4.8	4.8	4.8	4.4	4.8	4.8	4.8	4.5	4.8
13.0	4.4	4.8	4.8	4.1	4.7	4.8	3.7	4.4	4.8	4.8	3.7	4.5
14.0	3.7	4.2	4.3	3.5	4.1	4.4	3.1	3.7	4.2	4.3	3.2	4.0
15.0	3.3	3.7	3.7	3.0	3.6	3.8	2.7	3.2	3.7	3.7	2.7	3.5
16.0	2.8	3.3	3.3	2.6	3.1	3.4	2.3	2.9	3.3	3.4	2.3	3.0
17.0	2.5	2.9	3.0	2.2	2.8	3.0	1.9	2.5	2.9	3.0	1.9	2.6
18.0	2.1	2.6	2.7	1.9	2.4	2.7	1.6	2.2	2.6	2.6	1.6	2.3
19.0	1.9	2.3	2.3	1.6	2.1	2.4	1.3	1.9	2.3	2.3	1.3	2.1
20.0	1.6	2.0	2.1	1.4	1.9	2.1	1.1	1.6	2.0	2.1	1.1	1.8
21.0	1.4	1.8	1.8	1.1	1.7	1.9	0.9	1.4	1.8	1.8	0.8	1.5
22.0				0.9	1.5	1.7	0.7	1.2	1.6	1.6	0.7	1.4
23.0				0.8	1.3	1.5		1.0	1.4	1.5		1.2
24.0					1.1	1.4		0.9	1.2	1.3		1.0
25.0					0.9	1.2		0.7	1.1	1.1		0.9
26.0									1.0	1.0		0.7
27.0									0.8	0.9		
28.0									0.7	0.8		
29.0												
n	1	1	1	1	1	1	1	1	1	1	1	1
% 2#	0	0	0	46	0	0	92	46	0	0	92	46
% 3#	46	0	0	46	46	0	46	46	46	0	92	46
% 4#	46	46	0	46	46	46	46	46	46	92	46	46
% 5#	46	46	92	46	46	92	46	46	92	92	46	92
% 6#	46	92	92	46	92	92	46	92	92	92	46	92
m/s	12.8	12.8	12.8	12.8	12.8	12.8	11.1	11.1	11.1	11.1	11.1	11.1

TN

T	N

unit：t

360°	50%	6.5 t

m \ m	35.7	39.7	39.6	39.4	39.4	43.3	43.1	46.8	50.0			
7.0	4.8											
8.0	4.8	4.8	4.8	4.8	4.8							
9.0	4.8	4.8	4.8	4.8	4.8	4.8	4.8	4.8				
10.0	4.8	4.8	4.8	4.8	4.8	4.8	4.8	4.8	4.8			
11.0	4.8	4.8	4.8	4.8	4.8	4.8	4.8	4.8	4.8			
12.0	4.8	4.6	4.8	4.8	4.8	4.7	4.8	4.8	4.7			
13.0	4.8	3.9	4.3	4.6	4.7	4.0	4.5	4.2	4.1			
14.0	4.2	3.3	3.7	4.0	4.1	3.5	3.9	3.7	3.6			
15.0	3.7	2.8	3.2	3.5	3.5	3.0	3.4	3.2	3.2			
16.0	3.3	2.4	2.7	3.0	3.1	2.5	3.0	2.7	2.7			
17.0	2.9	2.0	2.4	2.6	2.7	2.2	2.6	2.3	2.4			
18.0	2.5	1.7	2.1	2.4	2.4	1.8	2.3	2.1	2.1			
19.0	2.3	1.4	1.8	2.1	2.1	1.6	1.9	1.7	1.8			
20.0	2.0	1.1	1.5	1.8	1.8	1.3	1.7	1.5	1.6			
21.0	1.8	1.0	1.3	1.6	1.6	1.1	1.5	1.3	1.3			
22.0	1.6	0.8	1.1	1.3	1.5	0.9	1.3	1.1	1.1			
23.0	1.4		0.9	1.2	1.2	0.7	1.1	0.9	0.9			
24.0	1.2		0.8	1.0	1.1		0.9	0.7	0.8			
25.0	1.1			0.9	0.9		0.8					
26.0	1.0			0.7	0.8		0.7					
27.0	0.8											
28.0	0.7											
29.0												
C_n	1	1	1	1	1	1	1	1	1			
% 2#	0	92	46	46	0	92	46	92	100			
% 3#	46	92	92	46	92	92	92	92	100			
% 4#	92	92	92	92	92	92	92	92	100			
% 5#	92	46	92	92	92	92	92	92	100			
% 6#	92	46	46	92	92	46	92	92	100			
m/s	11.1	11.1	11.1	11.1	11.1	11.1	11.1	11.1	11.1			

TN

T	N

unit：t

360°	50%	4.2 t

m	10.7	14.4	14.3	14.2	18.0	17.9	17.8	17.7	21.7	21.4	21.2	25.3
3.0	4.8											
3.5	4.8	4.8	4.8	4.8								
4.0	4.8	4.8	4.8	4.8	4.8	4.8	4.8	4.8				
4.5	4.8	4.8	4.8	4.8	4.8	4.8	4.8	4.8	4.8	4.8	4.8	
5.0	4.8	4.8	4.8	4.8	4.8	4.8	4.8	4.8	4.8	4.8	4.8	
6.0	4.8	4.8	4.8	4.8	4.8	4.8	4.8	4.8	4.8	4.8	4.8	4.8
7.0	4.8	4.8	4.8	4.8	4.8	4.8	4.8	4.8	4.8	4.8	4.8	4.8
8.0		4.8	4.8	4.8	4.8	4.8	4.8	4.8	4.8	4.8	4.8	4.8
9.0		4.8	4.8	4.8	4.8	4.8	4.8	4.8	4.8	4.8	4.8	4.8
10.0		4.2	4.8	4.8	4.6	4.8	4.8	4.8	4.4	4.8	4.8	4.8
11.0		3.3		4.2	3.7	4.2	4.6	4.7	3.5	4.7	4.8	3.9
12.0					3.0	3.5	3.9	3.9	2.8	4.0	4.4	3.2
13.0					2.4	2.9	3.3	3.3	2.2	3.4	3.7	2.6
14.0					1.9	2.4	2.8	2.9	1.7	2.9	3.3	2.1
15.0									1.3	2.5	2.8	1.7
16.0									1.0	2.1	2.5	1.4
17.0									0.7	1.8	2.1	1.0
18.0										1.5	1.8	0.8
19.0												
20.0												
21.0												
22.0												
23.0												
24.0												
25.0												
n	1	1	1	1	1	1	1	1	1	1	1	1
% 2#	0	0	0	0	0	0	0	0	46	0	0	46
% 3#	0	46	0	0	46	0	0	0	46	0	0	46
% 4#	0	0	0	0	46	46	0	0	46	46	0	46
% 5#	0	0	46	0	0	46	46	0	0	46	46	46
% 6#	0	0	0	46	0	0	46	92	0	46	92	0
m/s	14.3	14.3	14.3	14.3	14.3	14.3	14.3	14.3	12.8	12.8	12.8	12.8

TN

T N unit：t

360° 50% 4.2 t

m / m	25.1	24.9	24.8	28.8	28.6	28.5	32.4	32.2	32.1	32.1	36.1	35.8
6.0	4.8	4.8	4.8	4.8	4.8	4.8	4.8	4.8	4.8	4.8		
7.0	4.8	4.8	4.8	4.8	4.8	4.8	4.8	4.8	4.8	4.8	4.8	4.8
8.0	4.8	4.8	4.8	4.8	4.8	4.8	4.8	4.8	4.8	4.8	4.8	4.8
9.0	4.8	4.8	4.8	4.8	4.8	4.8	4.8	4.8	4.8	4.8	4.8	4.8
10.0	4.8	4.8	4.8	4.8	4.8	4.8	4.8	4.8	4.8	4.8	4.8	4.8
11.0	4.6	4.8	4.8	4.3	4.8	4.8	4.0	4.6	4.8	4.8	4.0	4.8
12.0	3.9	4.3	4.4	3.6	4.2	4.5	3.3	3.9	4.3	4.4	3.2	4.1
13.0	3.3	3.7	3.8	3.0	3.5	3.8	2.7	3.3	3.7	3.8	2.7	3.5
14.0	2.8	3.2	3.3	2.5	3.0	3.4	2.2	2.8	3.2	3.3	2.2	2.9
15.0	2.3	2.8	2.8	2.1	2.6	3.0	1.8	2.4	2.8	2.9	1.8	2.6
16.0	2.0	2.4	2.5	1.8	2.3	2.6	1.4	2.0	2.4	2.5	1.4	2.2
17.0	1.6	2.1	2.2	1.4	1.9	2.3	1.1	1.7	2.1	2.2	1.2	1.8
18.0	1.4	1.8	1.9	1.2	1.7	2.0	0.9	1.4	1.8	1.9	0.9	1.5
19.0	1.1	1.6	1.6	0.9	1.5	1.7	0.7	1.2	1.6	1.6		1.3
20.0	1.0	1.4	1.5	0.7	1.2	1.5		1.0	1.4	1.4		1.1
21.0	0.8	1.2	1.2		1.0	1.3		0.8	1.2	1.2		0.9
22.0					0.9	1.1			1.0	1.1		0.8
23.0					0.7	1.0			0.9	0.9		
24.0						0.8			0.7	0.8		
25.0						0.7						
n	1	1	1	1	1	1	1	1	1	1	1	1
% 2#	0	0	0	46	0	0	92	46	0	0	92	46
% 3#	46	0	0	46	46	0	46	46	46	0	92	46
% 4#	46	46	0	46	46	46	46	46	46	92	46	46
% 5#	46	46	92	46	46	92	46	46	92	92	46	92
% 6#	46	92	92	46	92	92	46	92	92	92	46	92
m/s	12.8	12.8	12.8	12.8	12.8	12.8	11.1	11.1	11.1	11.1	11.1	11.1

TN

T	N

unit：t

360°	50%	4.2 t

m	35.7	39.7	39.6	39.4	39.4	43.3	43.1	46.8	50.0			
7.0	4.8											
8.0	4.8	4.8	4.8	4.8	4.8							
9.0	4.8	4.8	4.8	4.8	4.8	4.8	4.8	4.8				
10.0	4.8	4.8	4.8	4.8	4.8	4.8	4.8	4.8	4.8			
11.0	4.8	4.1	4.5	4.8	4.8	4.2	4.7	4.3	4.1			
12.0	4.3	3.4	3.7	4.1	4.2	3.5	4.0	3.7	3.6			
13.0	3.7	2.8	3.2	3.5	3.6	2.9	3.4	3.1	3.1			
14.0	3.2	2.3	2.7	3.0	3.1	2.5	2.9	2.7	2.7			
15.0	2.8	1.9	2.3	2.6	2.6	2.0	2.5	2.2	2.3			
16.0	2.5	1.6	1.9	2.2	2.3	1.7	2.2	1.9	1.9			
17.0	2.1	1.2	1.6	1.9	2.0	1.4	1.8	1.6	1.6			
18.0	1.9	1.0	1.3	1.6	1.6	1.1	1.5	1.3	1.3			
19.0	1.6	0.7	1.1	1.4	1.4	0.9	1.3	1.1	1.1			
20.0	1.4		0.9	1.1	1.2	0.7	1.1	0.9	0.9			
21.0	1.2		0.7	0.9	1.0		0.9	0.7	0.7			
22.0	1.0			0.8	0.9		0.7					
23.0	0.9			0.7	0.7							
24.0	0.7											
25.0												
n	1	1	1	1	1	1	1	1	1			
% 2#	0	92	46	46	0	92	46	92	100			
% 3#	46	92	92	46	92	92	92	92	100			
% 4#	92	92	92	92	92	92	92	92	100			
% 5#	92	46	92	92	92	92	92	92	100			
% 6#	92	46	46	92	92	46	92	92	100			
m/s	11.1	11.1	11.1	11.1	11.1	11.1	11.1	11.1	11.1			

TN

T	N

unit：t

360°	50%	3.9 t

m	10.7	14.4	14.3	14.2	18.0	17.9	17.8	17.7	21.7	21.4	21.2	25.3
3.0	4.8											
3.5	4.8	4.8	4.8	4.8								
4.0	4.8	4.8	4.8	4.8	4.8	4.8	4.8	4.8				
4.5	4.8	4.8	4.8	4.8	4.8	4.8	4.8	4.8	4.8	4.8	4.8	
5.0	4.8	4.8	4.8	4.8	4.8	4.8	4.8	4.8	4.8	4.8	4.8	
6.0	4.8	4.8	4.8	4.8	4.8	4.8	4.8	4.8	4.8	4.8	4.8	4.8
7.0	4.8	4.8	4.8	4.8	4.8	4.8	4.8	4.8	4.8	4.8	4.8	4.8
8.0		4.8	4.8	4.8	4.8	4.8	4.8	4.8	4.8	4.8	4.8	4.8
9.0		4.8	4.8	4.8	4.8	4.8	4.8	4.8	4.8	4.8	4.8	4.8
10.0		4.1	4.7	4.8	4.5	4.8	4.8	4.8	4.2	4.8	4.8	4.6
11.0		3.2		4.1	3.6	4.1	4.5	4.6	3.3	4.6	4.8	3.8
12.0					2.9	3.3	3.8	3.8	2.7	3.9	4.3	3.0
13.0					2.3	2.8	3.2	3.3	2.1	3.3	3.6	2.5
14.0					1.9	2.3	2.7	2.7	1.7	2.8	3.1	1.9
15.0									1.2	2.4	2.7	1.6
16.0									0.9	2.0	2.4	1.2
17.0										1.7	2.0	1.0
18.0										1.4	1.8	0.7
19.0												
20.0												
21.0												
22.0												
23.0												
24.0												
25.0												
n	1	1	1	1	1	1	1	1	1	1	1	1
% 2#	0	0	0	0	0	0	0	0	46	0	0	46
% 3#	0	46	0	0	46	0	0	0	46	0	0	46
% 4#	0	0	0	0	46	46	0	0	46	46	0	46
% 5#	0	0	46	0	0	46	46	0	0	46	46	46
% 6#	0	0	0	46	0	0	46	92	0	46	92	0
m/s	14.3	14.3	14.3	14.3	14.3	14.3	14.3	14.3	12.8	12.8	12.8	12.8

TN

T	N

unit：t

360°	50%	3.9 t

m	25.1	24.9	24.8	28.8	28.6	28.5	32.4	32.2	32.1	32.1	36.1	35.8
6.0	4.8	4.8	4.8	4.8	4.8	4.8	4.8	4.8	4.8	4.8		
7.0	4.8	4.8	4.8	4.8	4.8	4.8	4.8	4.8	4.8	4.8	4.8	4.8
8.0	4.8	4.8	4.8	4.8	4.8	4.8	4.8	4.8	4.8	4.8	4.8	4.8
9.0	4.8	4.8	4.8	4.8	4.8	4.8	4.8	4.8	4.8	4.8	4.8	4.8
10.0	4.8	4.8	4.8	4.8	4.8	4.8	4.8	4.8	4.8	4.8	4.7	4.8
11.0	4.5	4.8	4.8	4.2	4.8	4.8	3.9	4.5	4.8	4.8	3.9	4.7
12.0	3.8	4.2	4.3	3.4	4.1	4.4	3.1	3.8	4.2	4.3	3.1	3.9
13.0	3.2	3.6	3.7	2.9	3.4	3.7	2.6	3.2	3.6	3.7	2.6	3.3
14.0	2.7	3.1	3.2	2.4	3.0	3.2	2.1	2.7	3.1	3.2	2.1	2.8
15.0	2.3	2.7	2.8	2.0	2.5	2.8	1.7	2.3	2.7	2.8	1.7	2.4
16.0	1.9	2.4	2.4	1.6	2.2	2.5	1.4	2.0	2.4	2.4	1.3	2.1
17.0	1.6	2.0	2.1	1.4	1.9	2.2	1.1	1.6	2.0	2.1	1.0	1.8
18.0	1.4	1.8	1.8	1.1	1.6	1.9	0.8	1.3	1.8	1.8	0.8	1.5
19.0	1.1	1.5	1.6	0.8	1.4	1.6		1.1	1.5	1.5		1.3
20.0	0.9	1.3	1.3	0.7	1.2	1.5		0.9	1.3	1.4		1.1
21.0	0.7	1.1	1.2		1.0	1.2		0.7	1.1	1.2		0.9
22.0					0.8	1.1			0.9	1.0		0.7
23.0					0.7	0.9			0.8	0.9		
24.0						0.8			0.7	0.7		
25.0						0.7						
n	1	1	1	1	1	1	1	1	1	1	1	1
% 2#	0	0	0	46	0	0	92	46	0	0	92	46
% 3#	46	0	0	46	46	0	46	46	46	0	92	46
% 4#	46	46	0	46	46	46	46	46	46	92	46	46
% 5#	46	46	92	46	46	92	46	46	92	92	46	92
% 6#	46	92	92	46	92	92	46	92	92	92	46	92
m/s	12.8	12.8	12.8	12.8	12.8	12.8	11.1	11.1	11.1	11.1	11.1	11.1

TN

T	N

unit：t

360°	50%	3.9 t

m \ m	35.7	39.7	39.6	39.4	39.4	43.3	43.1	46.8	50.0			
7.0	4.8											
8.0	4.8	4.8	4.8	4.8	4.8							
9.0	4.8	4.8	4.8	4.8	4.8	4.8	4.8	4.8				
10.0	4.8	4.7	4.8	4.8	4.8	4.7	4.8	4.8	4.6			
11.0	4.8	3.9	4.4	4.7	4.8	4.0	4.6	4.1	4.0			
12.0	4.2	3.3	3.6	4.0	4.0	3.4	3.8	3.6	3.5			
13.0	3.6	2.7	3.1	3.4	3.5	2.8	3.3	3.0	3.0			
14.0	3.1	2.2	2.6	2.9	3.0	2.4	2.8	2.6	2.6			
15.0	2.7	1.8	2.2	2.5	2.6	2.0	2.4	2.2	2.2			
16.0	2.3	1.4	1.8	2.1	2.2	1.6	2.0	1.8	1.8			
17.0	2.0	1.2	1.5	1.8	1.9	1.3	1.7	1.5	1.5			
18.0	1.7	0.9	1.3	1.5	1.6	1.0	1.5	1.2	1.3			
19.0	1.5	0.7	1.0	1.3	1.4	0.8	1.2	1.0	1.0			
20.0	1.3		0.8	1.1	1.1		1.0	0.8	0.8			
21.0	1.1			0.9	0.9		0.8					
22.0	0.9			0.7	0.8		0.7					
23.0	0.8				0.7							
24.0	0.7											
25.0												
	1	1	1	1	1	1	1	1	1			
% 2#	0	92	46	46	0	92	46	92	100			
% 3#	46	92	92	46	92	92	92	92	100			
% 4#	92	92	92	92	92	92	92	92	100			
% 5#	92	46	92	92	92	92	92	92	100			
% 6#	92	46	46	92	92	46	92	92	100			
m/s	11.1	11.1	11.1	11.1	11.1	11.1	11.1	11.1	11.1			

www.sanyglobal.com

Sany Automobile Hoisting Machinery Co., Ltd.

No.168, Jinzhou Avenue, Jinzhou Development Zone, Changsha, Hunan, China
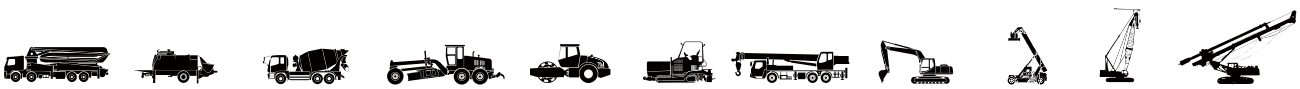
Tel: 0086-4006098318
E-mail: crd@sany.com.cn
Website: www.sanyglobal.com